Bulletin Officiel de la Propriété Industrielle (BOPI)

Brevets d'inventions

PUBLICATION
N° 06 BR / 2015
du 23 Mars 2016

Organisation
Africaine de la
Propriété
Intellectuelle

OAPI

SOMMAIRE

PREMIERE PARTIE
GENERALITES

Extrait de la norme ST.3 de l'OMPI

Code normalisé à deux lettres recommandé pour la représentationdes pays ainsi que d'autres entités et des organisations internationales délivrant ou enregistrant des titres de propriété industrielle.

Afghanistan	**AF**
Afrique du Sud	**ZA**
Albanie	**AL**
Algérie	**DZ**
Allemagne	**DE**
Andorre	**AD**
Angola	**AO**
Anguilla	**AI**
Antigua-et-Barbuda	**AG**
Antilles Néerlandaises	**AN**
Arabie Saoudite	**SA**
Argentine	**AR**
Arménie	**AM**
Aruba	**AW**
Australie	**AU**
Autriche	**AT**
Azerbaïdjan	**AZ**
Bahamas	**BS**
Bahreïn	**BH**
Bangladesh	**BD**
Barbade	**BB**
Bélarus	**BY**
Belgique	**BE**
Belize	**BZ**
Bénin*	**BJ**
Bermudes	**BM**
Bhoutan	**BT**
Bolivie	**BO**
Bonaire, Saint-Eustache et Saba	**BQ**
Bosnie-Herzégovine	**BA**
Botswana	**BW**
Bouvet,Île	**BV**
Brésil	**BR**
Brunéi Darussalam	**BN**
Bulgarie	**BG**
Burkina Faso*	**BF**
Burundi	**BI**
Caïmanes,Îles	**KY**
Cambodge	**KH**
Cameroun*	**CM**
Canada	**CA**
Cap-Vert	**CV**
Centrafricaine,République*	**CF**

Cook,Îles	**CK**
Corée(République de Corée)	**KR**
Corée (Rép. Populaire de Corée)	**KP**
Costa Rica	**CR**
Côte d'Ivoire*	**CI**
Croatie	**HR**
Cuba	**CU**
Danemark	**DK**
Djibouti	**DJ**
Dominicaine, République	**DO**
Dominique	**DM**
Egypte	**EG**
El Salvador	**SV**
Emirats Arabes Unis	**AE**
Equateur	**EC**
Erythrée	**ER**
Espagne	**ES**
Estonie	**EE**
Etats-Unis d'Amérique	**US**
Ethiopie	**ET**
Ex Rep. Yougoslavie de Macedoine	**MK**
Falkland, Îles (Malvinas)	**FK**
Fédération de Russie	**RU**
Fidji	**FJ**
Féroé, Îles	**FO**
Finlande	**FI**
France	**FR**
Gabon*	**GA**
Gambie	**GM**
Géorgie	**GE**
Géorgie du Sud et les Îles SandwichduSud	**GS**
Ghana	**GH**
Gibraltar	**GI**
Grèce	**GR**
Grenade	**GD**
Groenland	**GL**
Guatemala	**GT**
Guernesey	**GG**
Guinée*	**GN**
Guinée-Bissau*	**GW**
GuinéeEquatoriale*	**GQ**
Guyana	**GY**
Haïti	**HT**

Chili	**CL**
Chine	**CN**
Chypre	**CY**
Colombie	**CO**
Comores*	**KM**
Congo*	**CG**
Congo(Rép.Démocratique)	**CD**
Iran(République Islamique d')	**IR**
Iraq	**IQ**
Irlande	**IE**
Islande	**IS**
Israël	**IL**
Italie	**IT**
Jamaïque	**JM**
Japon	**JP**
Jersey	**JE**
Jordanie	**JO**
Kazakhstan	**KZ**
Kenya	**KE**
Kirghizistan	**KG**
Kiribati	**KI**
Koweït	**KW**
Laos	**LA**
Lesotho	**LS**
Lettonie	**LV**
Liban	**LB**
Libéria	**LR**
Libye	**LY**
Liechtenstein	**LI**
Lituanie	**LT**
Luxembourg	**LU**
Macao	**MO**
Macédoine	**MK**
Madagascar	**MG**
Malaisie	**MY**
Malawi	**MW**
Maldives	**MV**
Mali*	**ML**
Malte	**MT**
Mariannes du Nord,Îles	**MP**
Maroc	**MA**
Maurice	**MU**
Mauritanie*	**MR**
Mexique	**MX**
Moldova	**MD**
Monaco	**MC**

Honduras	**HN**
Hong Kong	**HK**
Hongrie	**HU**
Île de Man	**IM**
Îles Vierges (Britanniques)	**VG**
Inde	**IN**
Indonésie	**ID**
Norvège	**NO**
Nouvelle-Zélande	**NZ**
Oman	**OM**
Ouganda	**UG**
Ouzbékistan	**UZ**
Pakistan	**PK**
Palaos	**PW**
Panama	**PA**
Papouasie-Nouvelle-Guinée	**PG**
Paraguay	**PY**
Pays-Bas	**NL**
Pérou	**PE**
Philippines	**PH**
Pologne	**PL**
Portugal	**PT**
Qatar	**QA**
Région admin. Spéciale de Hong Kong (Rep. Populaire de Chine)	**HK**
Roumanie	**RO**
Royaume Uni (Grande Bretagne)	**GB**
Rwanda	**RW**
Sahara Occidental	**EH**
Sainte-Hélène	**SH**
Saint-Kitts-et-Nevis	**KN**
Sainte-Lucie	**LC**
Saint-Marin	**SM**
Saint-Marin (Partie Néerlandaise)	**SX**
Saint-Siège(Vatican)	**VA**
Saint-Vincent-et-les Grenadines(a,b)	**VC**
Salomon,Îles	**SB**
Samoa	**WS**
SaoTomé-et-Principe	**ST**
Sénégal*	**SN**
Serbie	**RS**
Seychelles	**SC**
Sierra Leone	**SL**
Singapour	**SG**
Slovaquie	**SK**
Slovénie	**SI**
Somalie	**SO**

Mongolie	MN	Soudan	SD
Monténégro	ME	SriLanka	LK
Montserrat	MS	Suède	SE
Mozambique	MZ	Suisse	CH
Myanmar(Birmanie)	MM	Suriname	SR
Namibie	NA	Swaziland	SZ
Nauru	NR	Syrie	SY
Népal	NP	Tadjikistan	TJ
Nicaragua	NI	Taïwan,Province de Chine	TW
Niger*	NE	Tanzanie (Rép.-Unie)	TZ
Nigéria	NG	Tchad*	TD
Thaïlande	TH	Tchèque,République	CZ
Timor Oriental	TP	Ukraine	UA
Togo*	TG	Uruguay	UY
Tonga	TO	Vanuata	VU
Trinité-et-Tobago	TT	Venezuela	VE
Tunisie	TN	VietNam	VN
Turkménistan	TM	Yémen	YE
Turks et Caïques,Îles	TC	Yougoslavie	YU
Turquie	TR	Zambie	ZM
Tuvalu	TV	Zimbabwe	ZW

ORGANISATIONS INTERNATIONALES DELIVRANT OU ENREGISTRANT DES TITRES DE PROPRIETE INDUSTRIELLE

Bureau Benelux des marques et des dessins et modèles industriels	BX
Office Communautaire des variétés végétales (Communauté Européenne (OCVV)	QZ
Office de l'harmonisation dans le marché intérieur (Marque, dessins et modèles)	EM
Office des Brevets du conseil de Coopération des Etats du Golf (CCG)	GC
Office Européen des Brevets (OEB)	EP
Organisation Mondiale de la Propriété Intellectuelle (OMPI)	WO
Bureau International de l'OMPI	IB
Organisation Africaine de la Propriété Intellectuelle (OAPI)	OA
Organisation Eurasienne des Brevets (OEAB)	EA
Organisation Régionale Africaine de la Propriété Industrielle (ARIPO)	AP

***Etats membres de l'OAPI**

CODES UTILISES EN MATIERE DE DOCUMENTATION DES BREVETS D'INVENTION ET DES MODELES D'UTILITE

(11) Numéro de publication.
(12) Désignation du type de document.
(19) Identification de l'office qui publie le document.
(21) Numéro d'enregistrement ou de dépôt.
(22) Date de dépôt.
(24) Date de délivrance.
(30) Pays dans lequel (lesquels) la(les) demande(s) de priorité a (ont) été déposée(s).
Date(s) de dépôt de la (des) demande(s) de priorité.

(le cas échéant)

Numéro(s) attribué(s) à la (aux) demande(s) de priorité.
(51) Classification internationale des brevets(CIB).
(54) Titre de l'invention.
(57) Abrégé.
(60) Références à d'autres documents apparentés (le cas échéant).
(71) Nom(s) du ou des demandeur(s).
(72) Nom de l'inventeur (le cas échéant) suivi éventuellement du nom de la société d'appartenance.
(73) Nom(s) du ou des titulaire(s) le cas échéant.
(Ce code n'apparaît que sur la première page du brevet délivré)
(74) Nom du mandataire en territoire OAPI (le cas échéant).

CODES UTILISES EN MATIERE D'INSCRIPTIONS DANS LE REGISTRE SPECIAL DES BREVETS D'INVENTION ET DES MODELES D'UTILITE

(1) Numéro de délivrance
(2) Numéro de dépôt
(3) Numéro et date de la demande d'inscription
(4) Nature de l'inscription
(5) Numéro et date de l'inscription
(10) Cédant
(11) Cessionnaire
(12) Apporteur
(13) Bénéficiaire
(14) Dénomination avant
(15) Dénomination après
(16) Concédant
(17) Titulaire
(18) Ancienne adresse
(19) Nouvelle adresse
(20) Constituant du nantissement
(21) Créancier nanti

CLARIFICATION DU REGLEMENT RELATIF A L'EXTENSION DES DROITS SUITE A UNE NOUVELLE ADHESION A L'ACCORD DE BANGUI

RESOLUTION N°47/32

LE CONSEIL D'ADMINISTRATION
DE L'ORGANISATION AFRICAINE DE LAPROPRIETE INTELLECTUELLE

Vu L'accord portant révision de l'accord de Bangui du 02 Mars 1977 instituant une Organisation Africaine de la Propriété Intellectuelle et ses annexes ;

Vu Les dispositions des articles 18 et 19 dudit Accord relatives Aux attributions et pouvoirs du Conseil d'Administration ;

ADOPTE la clarification du règlement du 04 décembre 1988 relatif à l'extension des droits suite à une nouvelle adhésion à l'Accord de Bangui ci-après :

Article 1er :

Le Règlement du 04 décembre 1988 relatif à l'extension des droits suite à une nouvelle adhésion à l'Accord de Bangui est réaménagé ainsi qu'il suit :

«**Article 5 (nouveau)** :

Les titulaires des titres en vigueur à l'Organisation avant la production des effets de l'adhésion d'un Etat à l'accord de Bangui ou ceux dont la demande a été déposée avant cette date et qui voudront étendre la protection dans ces Etats doivent formuler une demande d'extension à cet effet auprès de l'Organisation suivant les modalités fixées aux articles 6 à 18 ci-dessous.
Le renouvellement de la protection des titres qui n'ont pas fait l'objet d'extension avant l'échéance dudit renouvellement entraine une extension automatique des effets de la protection à l'ensemble du territoire OAPI».

Le reste sans changement.

Article 2 :

La présente clarification, qui entre en vigueur à compter du 1 er janvier 2008, s'applique aussi aux demandes d'extension en instance et sera publiée au Bulletin Officiel de l'Organisation.

Fait à Bangui le 17 décembre 2007

STRUCTURES NATIONALES DE LIAISON (SNL)

BENIN-Cotonou

Agence Nationale de la Propriété Industrielle (ANAPI)

Tel.: (229) 21 31 02 40
Fax.: (229) 21 30 30 24
01 B.P. 363 Cotonou 01

BURKINA FASO-Ouagadougou

Direction Nationale de la Propriété Industrielle (DNPI)
(Ministère de l'Industrie, du Commerce et de l'Artisanat)
Tél. : (226) 50 30 09 41
Fax : (226) 50 33 05 63
01 B.P. 258 Ouagadougou

CAMEROUN-Yaoundé

Direction du Développement Technologique et de la Propriété Industrielle
(Ministère des Mines, de l'Industrie et du Développement Technologique)
Tel. : (237) 22 20 37 78
Fax.: (237) 22 20 37 38
B.P. 1652 Yaoundé

CENTRAFRIQUE-Bangui

Direction de la Propriété Industrielle
(Ministère du Commerce et de l'Industrie)

Tél. : (236) 21 61 17 44
Fax : (236) 21 61 76 53
Avenue B. BOGANDA
B.P. 1988 Bangui

COMORES-Moroni

Office comorien de la propriété intellectuelle

Tél. : 269 333 53 60
Fax : 269 775 00 03
B.P. 41 Moroni

CONGO-Brazzaville

Antenne Nationale de la Propriété Industrielle (ANPI)
(Ministère du Développement Industriel et de la Promotion du Secteur Privé)
Tél. : (242) 581 56 57
Fax : (242) 581 54 80
B.P. : 72 Brazzaville

COTE D'IVOIRE-Abidjan

Office Ivoirien de la Propriété Industrielle (OIPI)

Tel. : (225) 20 33 53 43/44
Fax: (225) 20 33 53 45
01 B.P. 2337 Abidjan

GABON-Libreville

Centre de la Propriété Industrielle du Gabon (CEPIG)
(Ministère du Commerce et du Développement Industriel, Chargé du NEPAD)
Tel. : (241) 01 74 59 24
Fax. : (241) 01 76 30 55
B.P. : 1025 Libreville

GUINEE-Conakry

Service National de la Propriété Industrielle
(Ministère de l'Industrie, des Petites et Moyennes Entreprises)
Tel. : (224) 30 41 17 20/60 58 53 61
Fax: (224) 41 25 42/41 39 90
B.P. 468 Conakry

GUINEE BISSAU-Bissau

Direction Générale de la Propriété Industrielle
(Ministère du Commerce, de l'Industrie et de la Promotion des Produits locaux)
Tél : (245) 322 22 75
Fax : (245) 322 37 65
B.P. : 269 Bissau

GUINEE EQUATORIALE-Malabo

Direction de la Propriété Intellectuelle

(Conseil de la Recherche Scientifique et Technique - CICTE)
Tel. : (240) 222 09 24 84
Fax : (240) 333 09 33 13
B.P. : 528 Malabo

MALI-Bamako

Centre Malien de la Propriété Industrielle (CEMAPI)

Tel. : (223) 20 29 90 90
Fax: (223) 20 29 90 91
B.P. : 278 Bamako

MAURITANIE-Nouackchott

Service de la Technologie et de la Propriété Industrielle
(Ministère du Commerce, de l'Industrie, de l'Artisanat et du Tourisme)
Tel. : (222) 525 72 66
Fax: (222) 525 69 37
B.P. : 387 Nouakchott

NIGER-Niamey

Direction de l'Innovation et de la Propriété Intellectuelle
(Ministère des Mines et du Développement Industriel)
Tél. : (227) 20 73 58 25
Fax : (227) 20 73 21 50
B.P. : 480 Niamey

SENEGAL-Dakar

Agence Sénégalaise pour la Propriété Industrielle et l'Innovation Technologique (ASPIT)

Tel. : (221) 33 869 47 70
Fax: (221) 33 827 30 14
B.P. : 4037 Dakar

TCHAD-N'djamena

Division de la Propriété Industrielle et de la Technologie
(Ministère du Commerce et de l'Industrie)

Tel. : (235) 22 52 08 67
Fax: (235) 22 52 21 79
B.P. : 424 N'Djamena

TOGO-Lomé

Institut National de la Propriété Industrielle et de la Technologie (INPIT)

Tel. : (228) 222 10 08
Fax : (228) 222 44 70
B.P. : 2339 Lomé

OAPI
B.P. 887 Yaoundé-Cameroun
E-mail : oapi@oapi.int
Tél : (237) 22 20 57 00
Fax : (237) 22 20 57 27
www.oapi.int

DEUXIEME PARTIE

BREVETS D'INVENTION

A
REPERTOIRE NUMERIQUE

(11) **17066**

(51) A61K 36/886; A61P 31/18; A61K 31/715

(21) 1201300027 - PCT/US11/044652

(22) 20.07.2011

(30) US n° 61/367,358 du 23/07/2010

(54) Anti-viral properties of aloe vera and Aquired Immune Deficiency Syndrome (AIDS) treatment.

(72) DANHOF, Ivan, E.

(73) NORTH TEXAS MEDICAL ASSOCIATES (US)

(74) SCP AKKUM, AKKUM & Associates, Quartier Mballa II, Dragages, B.P. 4966, YAOUNDE (CM).

(57) A pharmaceutical composition comprising a combination of formulations derived from aloe vera for the treatment of Acquired Immune Deficiency Syndrome (AIDS) or HIV infection is described herein. The composition comprises: (i) an injectable sterile polymannan extract, (ii) Raidox (aloe anthraquinones and their diacetyl derivatives), and (iii) a freeze dried aloe vera powder, aloe vera juice, aloe gel or a combination. In addition one or more nutritional supplements comprising fatty acids, proteins, minerals and metals, vitamins, salts, amino acids, and other pharmaceutically acceptable excipients may also be include to counteract the chronic diarrhea, digestive upsets, and weight loss seen in some patients before and during the treatment course. A method for treating the AIDS or HIV infection using the composition of the present invention is also disclosed.

Consulter le mémoire

---

(11) **17067**

(51) H04L 12/00 (06.01)

(21) 1201300408 - PCT/IB12/000777

(22) 30.03.2012

(30) US n° 61/470,347 du 31/03/2011

(54) A method and device to provide automated connection to a wireless network.

(72) VIENNE Pascal.

(73) ORANGE (FR)

(74) Cabinet ALPHINOOR & Co. SARL, 191, Rue Boué de Lapeyrère, B.P. 5072, DOUALA (CM).

(57) A method for providing media content to a calling device provided with a media player for playing the media content, the media content being one of a plurality of media content identified in a media content database of a telecommunication network by corresponding media call numbers, the method carried out by a media service node of the telecommunication network, and including identified a request for a media content from the calling party, when intercepting a first call from the calling placed to a media call number of the media content database, identifying the media content corresponding to media call number using the media content database, activating a data connection to the calling party, sending a control message for starting the media player provided on the calling device, providing the identified media content to the calling device over the data connection for subsequent playing with the activated media player.

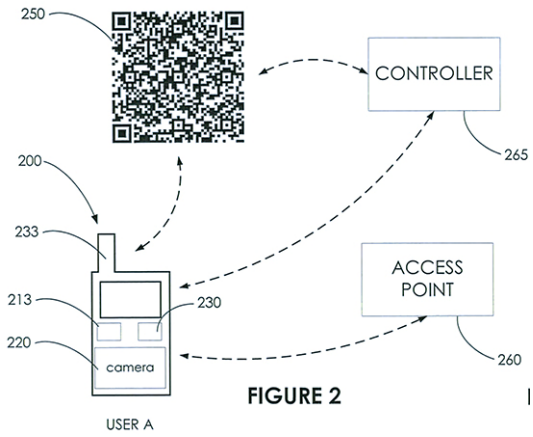

FIGURE 2

Consulter le mémoire

---

(11) **17068**

(51) C12N 15/53; C12N 9/02; C12N 15/82 A01H 5/00; C12N 15/113

(21) 1201300484 - PCT/SG11/000337

(22) 28.09.2011

(30) SG n° PCT/SG2011/000197 du 27/05/2011

(54) Microsomal w6 oleate desaturases.

(72) YE, Jian;

QU, Jing;

MAO, Hul Zhu.

(73) Temasek Life Sciences Laboratory Limited (SG)

(74) Cabinet Spoor & Fisher Inc. Ngwafor & Partners, Blvd. du 20 Mai, Immeuble Centre

Commercial de l'Hôtel Hilton, 2è Etage, Porte 208A, B.P. 8211, YAOUNDE (CM).

(57) The present invention relates to the field of plant molecular biology, more particularly Jatropha microsomal w6 oleate desaturases. The present invention also relates to Jatropha plants or plants of other oil crops having seeds with altered ratios of monosaturated and polyunsaturated fats. In particular, the present invention relates to Jatropha plants or plants of other oil crops where the plants exhibit elevated levels of oleic acid.

Fig. 1A

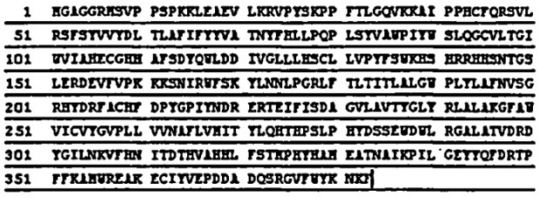

Consulter le mémoire

---

(11) **17069**

(51) A01N 25/32

(21) 1201400014 - PCT/US12/046131

(22) 11.07.2012

(30) US n° 61/506,743 du 12/07/2011

(54) Pesticidal compositions and processes related thereto.

(72) CROUSE, Gary D.;

DEMETER, David A.;

SPARKS, Thomas C.;

WANG, Nick X.;

DENT, William Hunter;

DEAMICIS, Carl;

NIYAZ, Noormohamed M.;

BAUM, Erich W.;

FISCHER, Lindsey Gayle;

GIAMPIETRO, Natalie Christine.

(73) Dow AgroSciences LLC (US)

(74) Cabinet Spoor & Fisher Inc. Ngwafor & Partners, Blvd. du 20 Mai, Immeuble Centre Commercial de l'Hôtel Hilton, 2è Etage, Porte 208A, B.P. 8211, YAOUNDE (CM).

(57) This document discloses molecules having the following formula

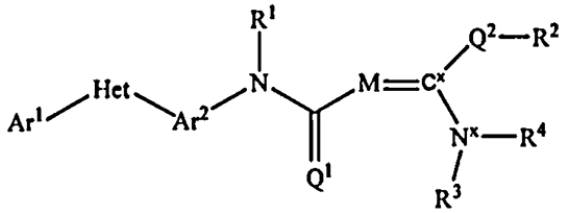

("Formula one") The molecules disclosed in this document are related to the field of processes to produce molecules that are useful as pesticides (e.g., acaricides, insecticides, molluscicides, and nematicides), such molecules, and processes of using such molecules to control pests.

Consulter le mémoire

---

(11) **17070**

(51) C07D 473/34; A61K 31/52; A61P 31/18 A61P 31/20

(21) 1201400057 - PCT/US12/050920

(22) 15.08.2012

(30) US n° 61/524,224 du 16/08/2011

(54) Tenofovir alafenamide hemifumarate.

(72) LIU, Dazhan;

SHI, Bing;

WANG, Fang;

YU, Richard, Hung Chiu.

(73) GILEAD SCIENCES, INC. (US)

(74) Cabinet ISIS CONSEILS (SCP), B.P.15067, YAOUNDE (CM).

(57) A hemifumaiate form of 9-[(R)-2-[[(S)-[[(S)-1-(isopropoxycarbonyl)ethyl]amino]phenoxyphosphinyl]methoxy]propyl]adenine (tenofovir alafenamide), and antiviral therapy using tenofovir alafenamide hemifurnarate (e.g., anti-HIV and anti-HBV therapies).

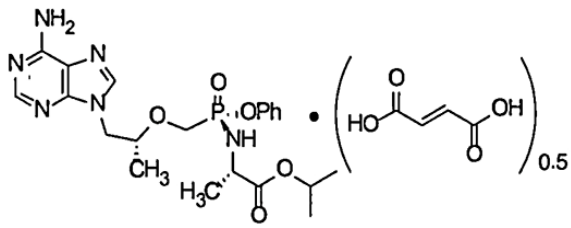

Consulter le mémoire

(11) **17071**

(51) B06F 5/02 (06.01)

(21) 1201400088 - PCT/SK12/000010

(22) 22.08.2012

(30) SK n° PP 5039-2011 du 30/08/2011

SK n° PUV 5044-2011 du 30/08/2011

(54) Transformation method of hybrid transportation vehicle for ground and air, and hybrid transportation vehicle itself.

(72) KLEIN, Stefan.

(73) Aeromobil, s.r.o. (SK)

(74) Cabinet Spoor & Fisher Inc. Ngwafor & Partners, Blvd. du 20 Mai, Immeuble Centre Commercial de l'Hôtel Hilton, 2è Etage, Porte 208A, B.P. 8211, YAOUNDE (CM).

(57) Transformation method of hybrid transportation vehicle for ground and air includes the following transformation and reciprocal steps: Tilting the compensation cover (7) on. Expansion of both whole wings (1) from the transportation vehicle longitudinal position around two vertical axes (2) into the flying position. Expansion of rear parts of wings (1) from the top front parts of wings (1) into the spread flying position by tilting the rear of each wing (1) around a horizontal axis (3). The take-off and landing tilting of wings (1) by an angle of attack alpha = 0 to 40° of the wings onset. Front wheels track (5) is reduced by axially shifting the front wheels (5) towards the fuselage. Furthermore, a corresponding hybrid transportation vehicle for ground and air is described which contains reciprocal transformation mechanisms for transformation from a sterling double or four-track automobile into a sterling aircraft for take-off and landing on the ground or water, and vice versa.

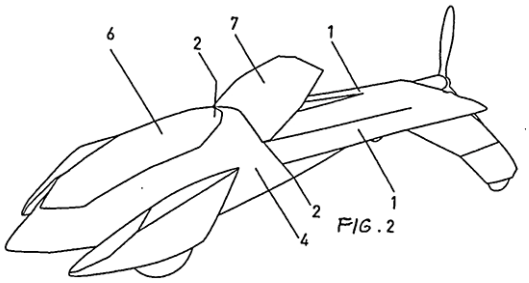

Consulter le mémoire

(11) **17072**

(51) C07K 16/28

(21) 1201400309 - PCT/US13/027580

(22) 25.02.2013

(30) US n° 61/603622 du 27/02/2012

(54) CX3CR1-binding polypeptides.

(72) SINGH Sanjaya;

WATERMAN Alisa K.;

DEPLA Erik;

LAEREMANS Toon;

VAN HOORICK Diane;

VERVERKEN Cedric Jozef Néotère.

(73) Boehringer Ingelheim International GmbH (DE)

(74) Cabinet ÉKÉMÉ LYSAGHT SARL, B.P. 6370, YAOUNDE (CM).

(57) The present invention relates to CX3CR1-binding polypeptides, in particular polypeptides comprising specific immunoglobulin domains. The invention also relates to nucleic acids encoding such polypeptides; to methods for preparing such polypeptides; to host cells expressing or capable of expressing such polypeptides; to compositions comprising such polypeptides; and to uses of such polypeptides or such compositions, in particular for prophylactic, therapeutic and diagnostic purposes.

Consulter le mémoire

(11) **17073**

(51) A61K 36/85; A61P 39/02; A61P 9/70

(21) 1201400348

(22) 01.08.2014

(54) Médicament antivenimeux bio.

(72) Monsieur NSANGOU MOUHAMMADOU BACHIROU.

(73) Monsieur NSANGOU MOUHAMMADOU BACHIROU, B.P : 14133, DOUALA (CM).

(57) L'invention concerne un médicament antivenimeux bio et son procédé d'obtention. C'est un médicament issu des plantes naturelles : le "chuchubop" et le "ngateuteu" pour le traitement et la prévention des pathologies toxiques provoqué par les morsures et piqûres des

insectes et reptiles venimeux de toutes espèces. Ce médicament se présente sous cinq formes : gélules, comprimés, liquide, poudre et en spray. De part sa composition naturelle, il ne contient aucun produit chimique. Sa fiabilité est incontournable, de par ses caractéristiques propres, assure une longue vie à toutes espèces humaines ainsi que les animaux domestiques.

Consulter le mémoire

---

(11) **17074**

(51) A23L 1/22

(21) 1201400349 - PCT/JP13/052667

(22) 06.02.2013

(30) JP n° 2012-023550 du 06/02/2012

(54) Aroma and/or flavor imparting composition, foodstuff, and production method for said foodstuff.

(72) ASO, Yuihaku.

(73) Ajinomoto Co., Inc. (JP)

(74) Cabinet Spoor & Fisher Inc. Ngwafor & Partners, Blvd. du 20 Mai, Immeuble Centre Commercial de l'Hôtel Hilton, 2è Etage, Porte 208A, B.P. 8211, YAOUNDE (CM).

(57) The problem of the present invention is to provide a composition capable of imparting, to food or drink, a preferable aroma and/or a flavor that brewed or fermented food or seafood extract intrinsically has, a food or drink having a preferable aroma and/or a flavor that brewed or fermented food or seafood extract intrinsically has, and a production method of the food or drink. A method of producing a food or drink, including a step of adding 1-octen-3-ol and/or 1- octen-3-one, lower fatty acid, and methional to the food or drink such that the concentration of 1- octen-3-ol and/or 1-octen-3-one to be added is not less than 0.00006 weight ppm and not more than 0.065 weight ppm, the concentration of lower fatty acid to be added is not less than 0.0006 weight ppm and not more than 0.7 weight ppm, and the concentration of methional to be added is not less than 0.2 weight ppm and not more than 230 weight ppm.

Consulter le mémoire

---

(11) **17075**

(51) A61K 31/422; A61P 33/00

(21) 1201400353 - PCT/US13/023969

(22) 31.01.2013

(30) US n° 61/595463 du 06/02/2012

(54) Parasiticidal oral veterinary compositions comprising systemically-acting active agents, methods and uses thereof.

(72) SOLL Mark D.;

LARSEN Diane;

CADY Susan Mancini;

CHEIFETZ Peter;

GALESKA Izabela;

GONG Saijun.

(73) Merial Limited (US)

(74) Cabinet ÉKÉMÉ LYSAGHT SARL, B.P. 6370, YAOUNDE (CM).

(57) This invention relates to oral veterinary compositions for combating ectoparasites and endoparasites in animals, comprising at least one systemically-acting active agent in combination with a pharmaceutically acceptable carrier. This invention also provides for improved methods for eradicating, controlling, and preventing parasite infections and infestations in an animal comprising administering the compositions of the invention to the animal in need thereof.

Planche de l'abrégé

Figure 1: Average Dissolution of 2g Chewables Stored at 25°C/60%RH

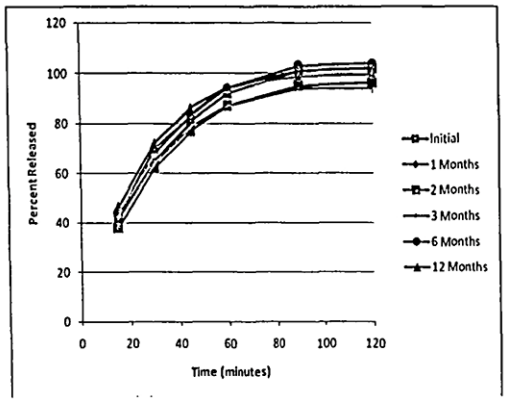

Consulter le mémoire

---

(11) **17076**

(51) C07D 231/14

(21) 1201400365 - PCT/EP13/052803

(22) 13.02.2013

(30) EP n° 12155526.2 du 15/02/2012

EP n° 12173642.5 du 26/06/2012

EP n° 12177606.6 du 24/07/2012

EP n° 12182799.2 du 03/09/2012

(54) Process for the stereoselective preparation of a pyrazole carboxamide.

(72) SMEJKAL, Tomas.

(73) SYNGENTA PARTICIPATIONS AG (CH)

(74) SCP AKKUM, AKKUM & Associates, Quartier Mballa II, Dragages, B.P. 4966, YAOUNDE (CM).

(57) The present invention relates to a process for the enantioselective preparation of 3-difluoromethyl-1-methyl-1H-pyrazole-4-carboxylic acid ((1S,4R)-9-dichloromethylene-1,2,3,4-tetrahydro-1,4-methano-naphthalen-5-yl)-amide of formula Ib.

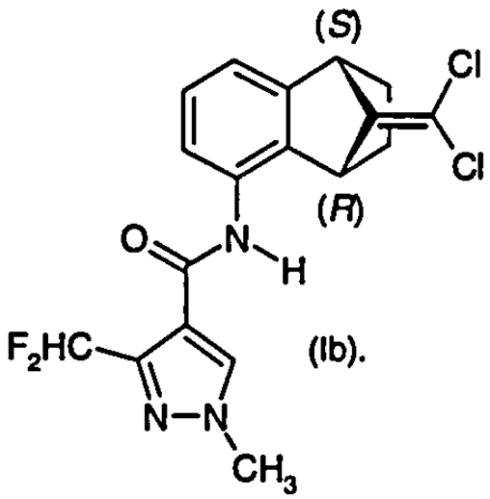

(Ib).

Consulter le mémoire

---

(11) **17077**

(51) C06B 25/36; C06B 31/12; C06B 31/32 C06B 47/00

(21) 1201400366 - PCT/IB13/051107

(22) 11.02.2013

(30) GB n° 1202402. 2 du 10/02/2012

(54) Oxidizer solution.

(72) ZIMMERMANN, Leon Michael.

(73) Maxam Dantex South Africa (Proprietary) Limited (ZA)

(74) Cabinet Spoor & Fisher Inc. Ngwafor & Partners, Blvd. du 20 Mai, Immeuble Centre Commercial de l'Hôtel Hilton, 2è Etage, Porte 208A, B.P. 8211, YAOUNDE (CM).

(57) According to this invention there is provided an aqueous oxidizer solution containing a mixture of dissolved oxidizing salts, for use in the preparation of explosives formulations, which a crystallization point as low as below 0°C. The solution has a water content of 25% by mass or less and contains ammonium nitrate and calcium nitrate wherein the ratio of the molar concentration of ammonium nitrate to calcium nitrate is preferably approximately 1. When the water content of the solution is 24% by mass or less, the solution further contains monomethylammonium nitrate. This solution can be used for manufacturing watergel explosives, or emulsion explosives or ANE's (ammonium nitrate emulsion suspension or gel explosives). It can be easily transported underground in deep level mines through relatively small diameter pipelines, using existing access ways and shafts, to the working places at which point it can then be converted into a watergel or emulsion explosive or an ANE.

Consulter le mémoire

---

(11) **17078**

(51) A61K 31/337; A61P 35/00

(21) 1201400369 - PCT/EP13/052518

(22) 08.02.2013

(30) EP n° 12305151.8 du 10/02/2012;

EP n° 12306352.1 du 30/10/2012

(54) New pediatric uses of cabazitaxel.

(72) SIDHU Sukhvinder S.;

VRIGNAUD Patricia.

(73) AVENTIS PHARMA S.A. (FR)

(74) Cabinet CAZENAVE SARL, B.P. 500, YAOUNDE (CM).

(57) The present invention relates to the compound of formula (I) :

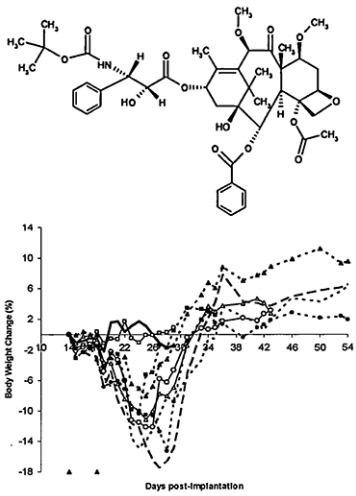

FIG.1

which may be in the form of an anhydrous base, a hydrate or a solvate, for its use for the treatment of pediatric cancers.

Consulter le mémoire

---

(11) **17079**

(51) C07D 213/75; C07D 217/22; C07D 405/14 C07D 409/04; C07D 407/12

(21) 1201400373 - PCT/EP13/053689

(22) 25.02.2013

(30) EP n° 12157199.6 du 27/02/2012

(54) 6-Alkynyl pyridines as SMAC mimetics.

(72) BADER Gerd;

SPEVAK Walter;

STEFFEN Andreas;

PARKES Alastair L.;

REISER Ulrich.

(73) Boehringer Ingelheim International GmbH (DE)

(74) Cabinet ÉKÉMÉ LYSAGHT SARL, B.P. 6370, YAOUNDE (CM).

(57) This invention relates to 5-alkynyl-pyridine of general formula (I).

This invention relates to 5-alkynyl-pyridine of general formula (I)

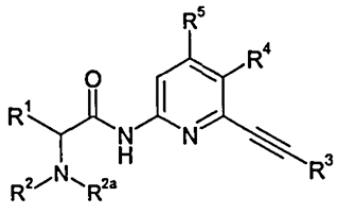

(I)

Their use as SMAC mimetics, pharmaceutical compositions containing them, and their use as medicaments for the treatment and/or prevention of diseases characterized by excessive or abnormal cell proliferation and associated conditions such a cancer. The groups R^1 to R^5 have the meanings given in the claims and in the specification.

Consulter le mémoire

---

(11) **17080**

(51) D01F 6/92

(21) 1201400370

(22) 14.08.2014

(30) JP n° 2013-226834 du 31/10/2013

(54) Polyester-based fiber for artificial hair,method for producing the same, and, fiber bundle for hair and hair ornament product including the same.

(72) HATANO Takanori;

YORIZANE Mika;

HIGAMI Tomokazu;

HASHIMOTO Tomomichi.

(73) KANEKA CORPORATION (JP)

(74) Cabinet ÉKÉMÉ LYSAGHT SARL, B.P. 6370, YAOUNDE (CM).

(57) A polyester-based fiber for artificial hair having excellent flame retardance and also a smooth touch similar to that of human hair, a method for producing the same, and, a fiber bundle for hair and a hair ornament product including the same, are provided. The polyester-based fiber for artificial hair of the present invention includes a polyester resin, a brominated epoxy flame retardant and an antimony compound. The polyester resin is polyalkylene terephthalate and/or a copolymerized polyester containing polyalkylene terephthalate as a main component. The antimony compound is a

compound containing pentavalent antimony and having a pH of 3 to 10, and the antimony compound has an average diagonal width of 0.5 um or less in the fiber cross section. A method for producing the polyester-based fiber for artificial hair includes a step of melt kneading a polyester resin composition including a polyester resin, a brominated epoxy flame retardant and antimony compound by an extruder, and during the melt kneading step, a ratio Q/R of a discharge amount Q (kg/hour) to a screw rotation number R (rpm) of the extruder is 1.8 or less.

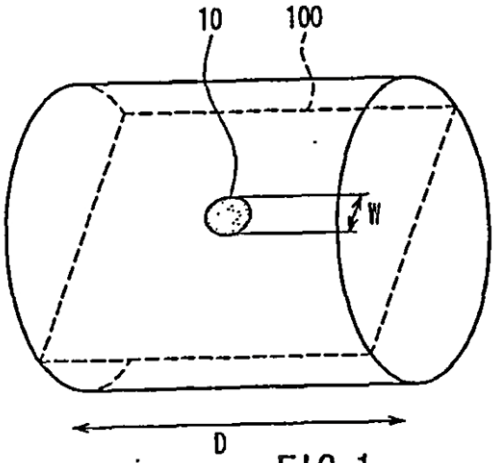

FIG. 1

Consulter le mémoire

---

(11) **17081**

(51) B01D 53/70; B01D 53/78; B01D 53/73

(21) 1201400380 - PCT/AT13/050038

(22) 14.02.2013

(30) AT n° A 205/2012 du 20/02/2012

(54) Method for degrading toxic organic compounds contained in wastewater and/or waste gases.

(72) PHILIPP Franz Josef.

(73) COMMERZIALBANK MATTERSBURG IM BURGENLAND AKTIENGESELLSCHAFT (AT)

(74) Cabinet CAZENAVE SARL, B.P. 500, YAOUNDE (CM).

(57) Method for degrading toxic organic compounds contained in wastewater and/or waste gases, wherein the wastewater or waste gases (2) polluted with toxic organic compounds is/are first introduced into an aqueous basic alkaline or alkaline earth solution/slurry bath (3) to destabilize the toxic organic compounds, and then the solution/slurry bath (3) containing the destabilized toxic organic compounds is fed into a capillary mass (4) arranged thereabove, formed from a mixture of reprocessed wood materials and peat mixed with bentonite, zeolite and/or lime with a particle size <200 µm.

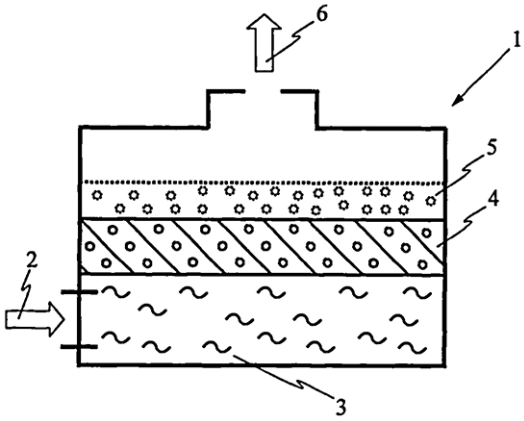

Consulter le mémoire

---

(11) **17082**

(51) B01D 53/62

(21) 1201400381 - PCT/AT13/050037

(22) 13.02.2013

(30) AT n° A 204/2012 du 20/02/2012

(54) Method for processing carbon dioxide contained in an exhaust gas flow.

(72) PHILIPP Franz Josef.

(73) COMMERZIALBANK MATTERSBURG IM BURGENLAND AKTIENGESELLSCHAFT (AT)

(74) Cabinet CAZENAVE SARL, B.P. 500, YAOUNDE (CM).

(57) The present invention relates to a method for processing carbon dioxide (CO_2) contained in an exhaust gas flow (1). For the purpose of obtaining a carbon-enriched product (9) from organic-containing substances and carbon dioxide (CO_2), the exhaust gas flow (1) is brought into contact in a drying and cooling chamber (3) with a moist, porous, siliceous material and admixed aluminium hydroxide and/or aluminium oxide hydrate (4) and/or optionally a different metal oxidation means, with the generation of a basic aqueous milieu and for the destabilisation of the carbon dioxide (CO_2), said exhaust gas flow being cooled in said chamber, wherein the quantity of

aluminium hydroxide and/or aluminium oxide hydrate (4) to be admixed is controlled by means of an ongoing Ph value measurement (2), after wich the aqueous milieu is fed to a subsequent prechamber (5) which is charged with a material (6) carrying oxidisable alkaline earth metal and/or heavy metal, wherein a neutralisation of the aqueous milieu carrying ionised carbon occurs and formed alkaline earth metal and/or heavy metal oxide (10) is discharged from the prechamber (5) and the aqueous milieu carrying ionised carbon C is then fed to a main chamber (7) charged with material (8) consisting of organic carbon compounds and/or containing organic carbon compounds.

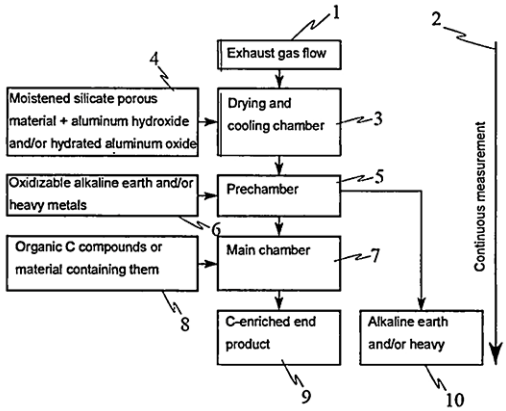

Fig. 1

Consulter le mémoire

---

(11) **17083**

(51) A01N 43/56; A01N 53/00; A61K 31/22 A61P 33/06

(21) 1201400382 - PCT/US13/027312

(22) 22.02.2013

(30) US n° 61/602472 du 23/02/2012

(54) Topical compositions comprising fipronil and permethrin and methods of use.

(72) SOLL Mark David;

PATE James;

BAKER Lisa A.

(73) Merial Limited (US)

(74) Cabinet ÉKÉMÉ LYSAGHT SARL, B.P. 6370, YAOUNDE (CM).

(57) The subject matter disclosed herein is directed to stable, highly-effective topical formulations comprising permethrin, fibronil and a solvent system that is sufficient to solubilize these two active ingredients and limit degradation of fipronil to its sulfone, and their uses in topical applications on animals and the environment. Useful formulations comprise from about 30 % to about 55 % (w/w) permethrin and about 2 to 15 % (w/w) fipronil and a solvent system that comprises N-methyl pyrrolidone and a glycol, glycol ether, glycol ester, fatty acid ester or neutral oil, wherein the N-methyl pyrrolidone and glycol, glycol ether, glycol ester, fatty acid ester or neutral oil are present in a weight : weight ratio of from about 1:2.0 to about 1:3.5, glycol, glycol ether, glycol ester, fatty acid ester or neutral oil to n-methyl pyrrolidone. These two actives when combined in the described amounts have been found to have unexpected enhanced repellent activity against stable fly. However, it is the formulations described herein that provide solvency and stability that maintain synergistic concentrations after application on an animal.

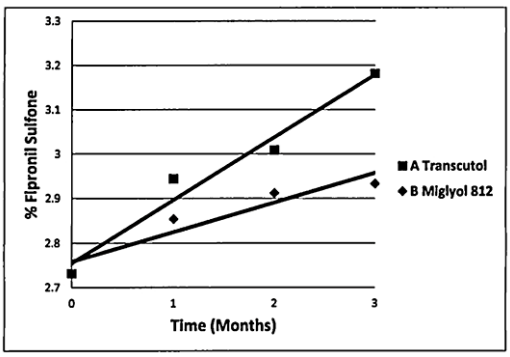

Fig. 1

Consulter le mémoire

---

(11) **17084**

(51) A61K 9/00; A61K 31/675; A61K 47/32

(21) 1201400383 - PCT/IB13/051432

(22) 21.02.2013

(30) IN n° 496/DEL/2012 du 21/02/2012

(54) Taste masked dispersible tablets.

(72) ARORA, Vinod, Kumar;

KHURANA, Jatin;

GAIKWAD, Deepak.

(73) Ranbaxy Laboratories Limited (IN)

(74) Cabinet Spoor & Fisher Inc. Ngwafor & Partners, Blvd. du 20 Mai, Immeuble Centre Commercial de l'Hôtel Hilton, 2è Etage, Porte 208A, B.P. 8211, YAOUNDE (CM).

(57) The present invention relates to a taste-masked dispersible tablet comprising a drug, a cation exchange resin, and other pharmaceutically acceptable excipients, such that the said drug and the said cation exchange resin are present in an un-complexed form in the tablet. It further relates to a process for the preparation of the same.

Consulter le mémoire

(11) **17085**

(51) C07K 16/40; A61K 39/395; C12N 9/64

(21) 1201400386 - PCT/US12/027160

(22) 29.02.2012

(54) Antibodies to matrix metalloproteinase 9.

(72) SMITH Victoria;

MCCAULEY Scott.

(73) Gilead Biologics, Inc. (US)

(74) Cabinet ÉKÉMÉ LYSAGHT SARL, B.P. 6370, YAOUNDE (CM).

(57) The present disclosure provides compositions and methods of use involving binding proteins, e.g., antibodies and antigen-binding fragments thereof, that bind to the matrix metalloproteinase-9 (MMP9) protein (MMP9 is also known as gelatinase-B), such as where the binding proteins comprise an immunoglobulin (Ig) heavy chain (or functional fragment thereof) and an Ig light chain (or functional fragment thereof).

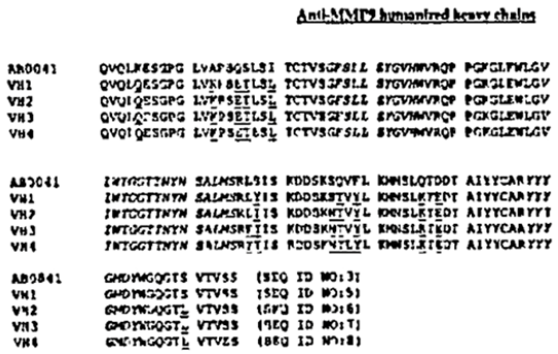

Fig. 1

Consulter le mémoire

(11) **17086**

(51) C07D 311/58; A61K 31/353; A61P 19/00

(21) 1201400388 - PCT/IB13/051445

(22) 22.02.2013

(30) IN n° 178/KOL/2012 du 24/02/2012

IN n° 1030/KOL/2012 du 07/09/2012

(54) Substituted chroman compounds as calcium sensing receptor modulators.

(72) SHUKLA, Manojkumar, Ramprasad;

SARDE, Ankush Gangaram;

LORIYA, Rajeshkumar Maganlal;

PACHPUTE, Vipul, Dilip;

WALKE, Navnath, Bajirao;

KHAN, Talha, Hussain;

KULKARNI, Sanjeev Anant;

PALLE, Venkata P.;

KAMBOJ, Rajender, Kumar.

(73) Lupin Limited (IN)

(74) Cabinet Spoor & Fisher Inc. Ngwafor & Partners, Blvd. du 20 Mai, Immeuble Centre Commercial de l'Hôtel Hilton, 2è Etage, Porte 208A, B.P. 8211, YAOUNDE (CM).

(57) The present invention provides calcium sensing receptor modulators (CaSR). In particular, the compounds described herein are useful for treating, managing, and/or lessening the severity of diseases, disorders, syndromes and/or conditions associated with the modulation of calcium sensing receptors (CaSR). The invention also provides herein the pharmaceutical compositions thereof, and methods for treating, managing, and/or lessening the severity of diseases, disorders, syndromes and/or conditions associated with the modulation of CaSR. The invention also relates to process for the preparation of the compounds of the invention.

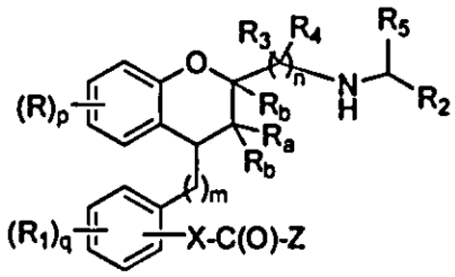

(I)

Consulter le mémoire

(11) **17087**

(51) C07D 235/02; C07C 49/323; A61P 25/28 A61K 31/4184

(21) 1201400390 - PCT/US13/028796

(22) 04.03.2013

(30) US n° 61/606,786 du 05/03/2012

(54) Inhibitors of beta-secretase.

(72) BUKHTIYAROV, Yuri;

CACATIAN, Salvacion;

DILLARD, Lawrence, Wayne;

DORNER-CIOSSEK, Cornelia;

FUCHS, Klaus;

JIA, Lanqi;

LALA, Deepak, S.;

MORALES-RAMOS, Angel;

RAST, Georg;

REEVES, Jonathan;

SINGH, Suresh, B.;

VENKATRAMAN, Shankar;

XU, Zhenrong;

YUAN, Jing;

ZHAO, Yi;

ZHENG, Yajun.

(73) BOEHRINGER INGELHEIM INTERNATIONAL GMBH (DE);

VITAE PHARMACEUTICALS, INC. (US)

(74) SCP AKKUM, AKKUM & Associates, Quartier Mballa II, Dragages, B.P. 4966, YAOUNDE (CM).

(57) The present invention relates to spirocyclic acylguanidines and their use as inhibitors of the ß-secretase enzyme (BACEl) activity, pharmaceutical compositions containing the same, and methods of using the same as therapeutic agents in the treatment of neurodegenerative disorders, disorders characterized by cognitive decline, cognitive impairment, dementia and diseases characterized by production of ß-amyloid aggregates.

Consulter le mémoire

---

(11) **17088**

(51) C04K 28/02; C09K 8/42; C09K 8/473

(21) 1201400391 - PCT/US13/029489

(22) 07.03.2013

(30) US n° 13/417,001 du 09/03/2012

(54) Set-delayed, cement compositions comprising pumice and associated methods.

(72) BROTHERS, Lance E.;

PISKLAK, Thomas J.

(73) Halliburton Energy Services, Inc. (US)

(74) Cabinet Spoor & Fisher Inc. Ngwafor & Partners, Blvd. du 20 Mai, Immeuble Centre Commercial de l'Hôtel Hilton, 2è Etage, Porte 208A, B.P. 8211, YAOUNDE (CM).

(57) A variety of methods and compositions are disclosed, including, in one embodiment, a method of cementing in a subterranean formation, comprising: providing a set-delayed cement composition comprising water, pumice, hydrated lime, and a set retarder; activating the set-delayed cement composition; introducing the set-delayed cement composition into a subterranean formation; and allowing the set-delayed cement composition to set in the subterranean formation.

Consulter le mémoire

---

(11) **17089**

(51) G06F 17/30 (06.01)

(21) 1201400402 - PCT/CN13/072046

(22) 01.03.2013

(30) CN n° 201210059860.3 du 08/03/2012

(54) Content sharing method, terminal, server, and system, and computer storage medium.

(72) ZHANG, Xiaolong.

(73) Tencent Technology (Shenzhen) Company Limited (CN)

(74) Cabinet Spoor & Fisher Inc. Ngwafor & Partners, Blvd. du 20 Mai, Immeuble Centre Commercial de l'Hôtel Hilton, 2è Etage, Porte 208A, B.P. 8211, YAOUNDE (CM).

(57) A method, a terminal, a server, a system and a computer storage medium for sharing contents are disclosed. The method includes: receiving a reporting request massage carrying position information and identifier information of a user sent by a terminal when an application adapted to obtain contents is used to obtain a content to be shared, obtaining a sharing object according to the position information and the identifier information of the user, wherein the distance

between the user and the sharing object is less than a predetermined distance and/or the sharing object has used the application in a predetermined time period, and sending a reporting response massage carrying the sharing object to the terminal to enable the terminal to share the content to be shared according to the sharing object.

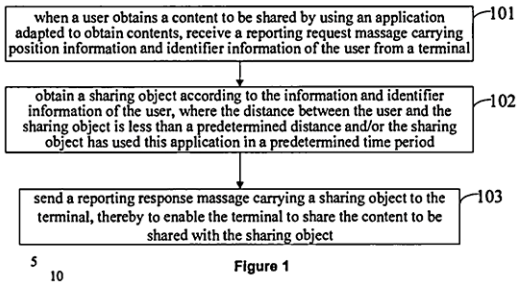

Figure 1

Consulter le mémoire

---

(11) **17090**

(51) H04L 12/58 (06.01)

(21) 1201400403 - PCT/CN13/071867

(22) 26.02.2013

(30) CN n° 201210061874.9 du 09/03/2012

(54) Interactive interface display control method, instant communication tool and computer storage medium.

(72) LI, Zhongnan;
LI, Lei;
YANG, Guang;
XIAN, Yecheng;
WU, Zurong;
GAO, Shundong;
LIN, Yehui;
JIN, Xin;
WANG, Wenxiang;
DING, Yida;
WANG, Wentao;
ZENG, Shourun;
CHEN, Yan;
CHEN, Junbiao.

(73) Tencent Technology (Shenzhen) Company Limited (CN)

(74) Cabinet Spoor & Fisher Inc. Ngwafor & Partners, Blvd. du 20 Mai, Immeuble Centre Commercial de l'Hôtel Hilton, 2è Etage, Porte 208A, B.P. 8211, YAOUNDE (CM).

(57) Provided is an interactive interface display control method, instant communication tool and computer storage medium. The interactive interface displayed control method, comprising the following steps : acquiring a contact list and a message of a friend in a contact list; generating an image block corresponding to the friend in the contact list; and displaying the message of the friend in the image block. The interactive interface display control method, the instant communication tool, and computer storage medium are realized by generating a corresponding image block for each friend in the contact list, and then displaying the message of the friend in the image block, thereby a user can view the message of the friend directly from the image block in the interface, which simplifies and facilities the operation.

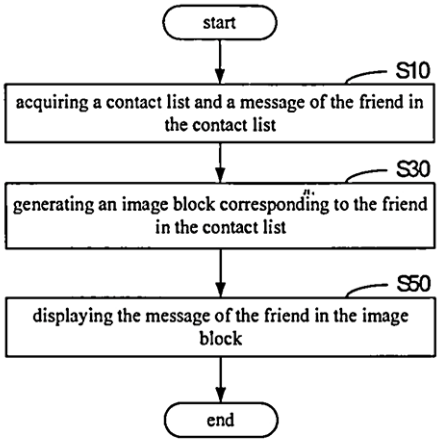

Fig.1

Consulter le mémoire

---

(11) **17091**

(51) H04L 29/06 (06.01)

(21) 1201400404 - PCT/CN13/071377

(22) 05.02.2013

(30) CN n° 201210054861.9 du 02/03/2012

(54) Login method and device, terminal and network server.

(72) WANG, Jiao;
LIU, Ling;
DENG, Liang;
SUN, Yibo.

(73) Tencent Technology (Shenzhen) Company Limited (CN)

(74) Cabinet Spoor & Fisher Inc. Ngwafor & Partners, Blvd. du 20 Mai, Immeuble Centre Commercial de l'Hôtel Hilton, 2è Etage, Porte 208A, B.P. 8211, YAOUNDE (CM).

(57) A login method and device, and a terminal and a network server are disclosed, which relate to communications technologies. In the method, acquire an account waiting for login and a first password, and judge whether the first password is the same as a local password bound with the prestored account. If the first password is the same as the local password bound with the prestored account, upload a second password corresponding to the prestored account to a network server for matching, and log in to the account once the second password is successfully matched. The present invention introduces a custom password (i.e., the first password), thus avoids the complexity to enter an actual login password (i.e., the second password) and the unsafety to remember the actual login password in a terminal, and enhances the convenience and safety for login and offers greater user experience.

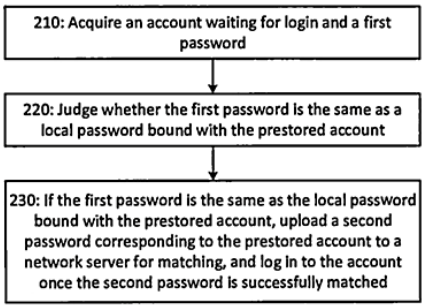

Fig. 2

Consulter le mémoire

---

(11) **17092**

(51) G01M 11/08 (06.01)

(21) 1201400406 - PCT/EP13/054530

(22) 06.03.2013

(30) FR n° 12 52036 du 06/03/2012

(54) Elément d'armure pour une ligne flexible destinées à être placée dans une étendue d'eau, ligne flexible, méthode et procédé associé.

(72) DO An Tuan.

(73) TECHNIP France (FR)

(74) Cabinet CAZENAVE SARL, B.P. 500, YAOUNDE (CM).

(57) Cet élément comporte une pluralité de filaments longitudinaux (52) de fibres de carbone et une matrice (50) en polymère recevant les filaments (52) pour les lier entre eux, la matrice (50) formant un ruban destiné à être enroulé autour d'un corps longitudinal de la ligne flexible. L'élément d'armure (42) comporte au moins une fibre optique (54) reçue dans la matrice (50), la fibre optique (54) présentant un allongement à la rupture supérieur à 2%, tel que mesuré par la norme ASTM-D 885-03.

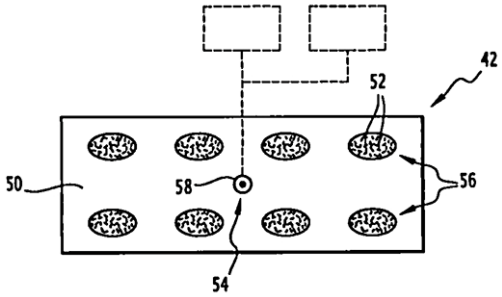

Fig. 3

Consulter le mémoire

---

(11) **17093**

(51) G06F 19/00 (06.01)

(21) 1201400410 - PCT/CN13/071202

(22) 31.01.2013

(30) CN n° 201210061716.3 du 09/03/2012

(54) Method and device for processing animated emoticon.

(72) ZHANG, Xiaolong;

LIN, Qianya;

WENG, Yueteng;

CHEN, Yuehai;

GUAN, Zhenan.

(73) TENCENT TECHNOLOGY (SHENZHEN) COMPANY LIMITED (CN)

(74) SCP AKKUM, AKKUM & Associates, Quartier Mballa II, Dragages, B.P. 4966, YAOUNDE (CM).

(57) According to an example, an emoticon state of an animated emoticon transmitted by each of plurality of clients is obtained, or emoticon states of an animated emoticon transmitted by any two of a plurality of clients are obtained; a determination result of emoticon states transmitted by the clients is obtained according to a predefined animated emoticon determination rule; and the determination result is outputted to the clients for display.

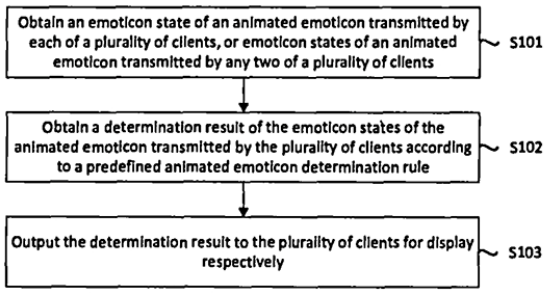

Fig. 1

Consulter le mémoire

(11) **17094**

(51) G01V 1/38 (06.01)

(21) 1201400411 - PCT/US13/028908

(22) 04.03.2013

(30) US n° 13/413, 562 du 06/03/2012

(54) Extracting SV shear data from P-wave marine data.

(72) HARDAGE, Bob, A.

(73) Board of Regents of the University of Texas System (US)

(74) Cabinet Spoor & Fisher Inc. Ngwafor & Partners, Blvd. du 20 Mai, Immeuble Centre Commercial de l'Hôtel Hilton, 2è Etage, Porte 208A, B.P. 8211, YAOUNDE (CM).

(57) A system and method of processing seismic data obtained using a plurality of towed single-component receivers in a marine environment is described, the towed single-component receivers configured to measure compressional P waves. The method comprises retrieving seismic data from a storage device, the seismic data comprising P-P data and shear mode data, wherein the P-P data and shear mode data were both received at the towed single-component receivers configured to measure compressional P waves to generate the seismic data. The method further comprises processing the seismic data to extract SV-P shear mode data and generating shear mode image data based on the extracted shear mode data.

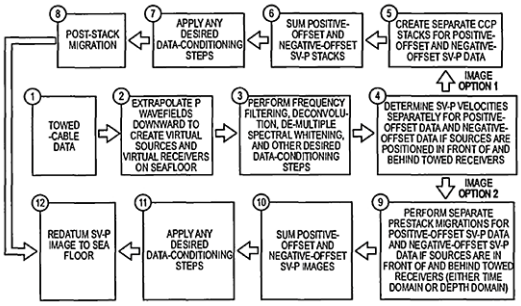

Fig. 46

Consulter le mémoire

(11) **17095**

(51) G06F 9/445 (06.01)

(21) 1201400417 - PCT/CN13/071850

(22) 25.02.2013

(30) CN n° 201210071067.5 du 16/03/2012

(54) Method, apparatus and computer storage medium for plug-in management and control.

(72) HUANG, Tianqing;

YE, Wa;

CHEN, Yuehai;

ZHAO, Yuan;

ZHANG, Yuxuan;

HUANG, Runjia;

HUANG, Qing;

CHEN, Junchao;

CAI, Runda.

(73) Tencent Technology (Shenzhen) Company Limited (CN)

(74) Cabinet Spoor & Fisher Inc. Ngwafor & Partners, Blvd. du 20 Mai, Immeuble Centre Commercial de l'Hôtel Hilton, 2è Etage, Porte 208A, B.P. 8211, YAOUNDE (CM).

(57) A method, apparatus and computer storage medium for plug-in management and control are described, for solving technical problems in the related art that plug-ins integrated in a system or application are managed and controlled independently and the management process is over-fussy, complicated and inefficient, and it is unable to manage and control general attributes of the plug-ins uniformly. The present disclosure performs deep and complete control on the plug-ins in the system or application software by utilizing a plug-in list module and a plug-in function controlling module, and the control includes on and off of the plug-ins, ways of reminding, types of receivable messages and so on. In the present disclosure, the continuously increasing plug-ins can be managed in a uniform and standardized way in a program. Thus, the present disclosure can improve the efficiency of the control and management of plug-ins and enhance the simplicity and manipulation of software.

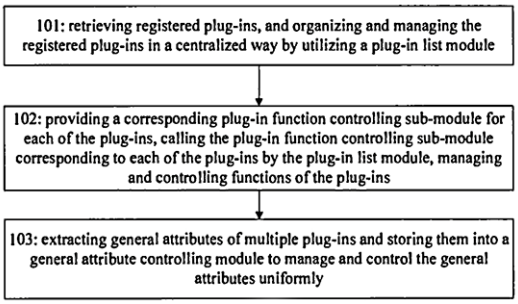

Fig. 1

Consulter le mémoire

(11) **17096**

(51) G06Q 30/02 (06.01)

(21) 1201400418 - PCT/CN13/072276

(22) 07.03.2013

(30) CN n° 201210063523.1 du 12/03/2012

(54) Advertisement providing method, device, system and computer storage medium based on geographic location.

(72) CHEN, Peixuan.

(73) Tencent Technology (Shenzhen) Company Limited (CN)

(74) Cabinet Spoor & Fisher Inc. Ngwafor & Partners, Blvd. du 20 Mai, Immeuble Centre Commercial de l'Hôtel Hilton, 2è Etage, Porte 208A, B.P. 8211, YAOUNDE (CM).

(57) Provided are an advertisement information providing method, device, system and computer storage medium based on geographic location, the method comprising: receiving an advertisement issuing request transmitted by a first user equipment (UE), acquiring the geographic location information of the first UE, storing the geographic location information of the first UE and the advertisement information of the first UE carried in the advertisement issuing request; receiving a peripheral information searching request transmitted by a second UE, acquiring the geographic location information of the second UE, searching for one or more first UEs on the periphery of the second UE according to the geographic location information of the second UE, providing the second UE with the advertisement information of the one or more first UEs found. The present invention is easy to realize and can provide advertisement information to a consumer based on the geographic locations of a merchant and the consumer.

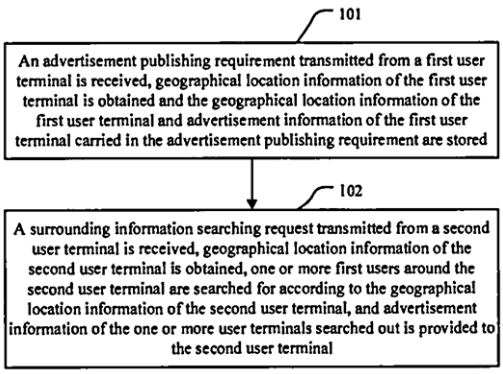

Fig. 1

Consulter le mémoire

(11) **17097**

(51) H04L 12/58 (06.01)

(21) 1201400419 - PCT/CN13/072116

(22) 04.03.2013

(30) CN n° 201210076384.6 du 21/03/2012

(54) Information sharing method device and storage medium.

(72) CAI, Runda;

HUANG, Qing;

ZHOU, Zhijie;

FAN, Liangliang;

HUANG, Runjia;

LIN, Xueqin;

YANG, Ganrong;

RONG, Kunfeng;

LIANG, Xing;

CHEN, Haiwen;

FENG, Jingqiong;

HUANG, Tianqing.

(73) Tencent Technology (Shenzhen) Company Limited (CN)

(74) Cabinet Spoor & Fisher Inc. Ngwafor & Partners, Blvd. du 20 Mai, Immeuble Centre Commercial de l'Hôtel Hilton, 2è Etage, Porte 208A, B.P. 8211, YAOUNDE (CM).

(57) Various examples of the present disclosure provide a method, an apparatus and a storage medium for sharing information. According to the method, a user to be shared is identified in an address book in an instant messaging (IM) client; an electronic business card is generated by using basic information of the to-be-shared user in the IM system, and is sent to a receiving client. Various examples of the present disclosure also provide a method and an apparatus for receiving shared information.

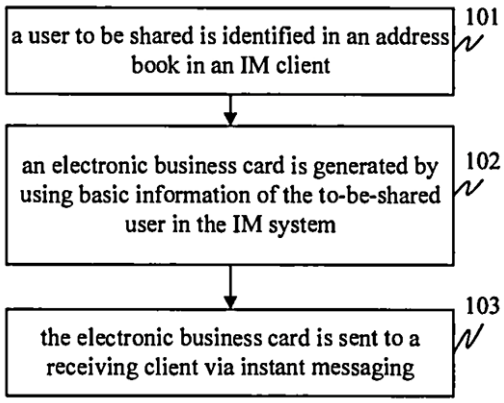

Fig. 1

Consulter le mémoire

---

(11) **17098**

(51) H04L 9/32 (06.01)

(21) 1201400421 - PCT/CN13/072531

(22) 13.03.2013

(30) CN n° 201210072147.2 du 19/03/2012

(54) Authentication method, device and system based on biological characteristics.

(72) XIONG, Pengfei;

CHEN, Bo;

HOU, Jie;

LIU, Hailong.

(73) TENCENT TECHNOLOGY (SHENZHEN) COMPANY LIMITED (CN)

(74) SCP AKKUM, AKKUM & Associates, Quartier Mballa II, Dragages, B.P. 4966, YAOUNDE (CM).

(57) A biometric-based authentication method, an apparatus, and a system are described. The method includes: receiving a biometric image to be authenticated sent from a client; performing feature extraction to the biometric image to be authenticated to obtain a biometric template to be authenticated; comparing the biometric template to be authenticated with a locally-stored biometric template; and returning an authentication result. In this case, the feature extraction process may be implemented at a cloud server side, as such, the complexity of the client may be reduced, the expandability of the client may be increased, a limitation that the biometric recognition may only be implemented on the client may be eliminated, and diversified utilization may be supported.

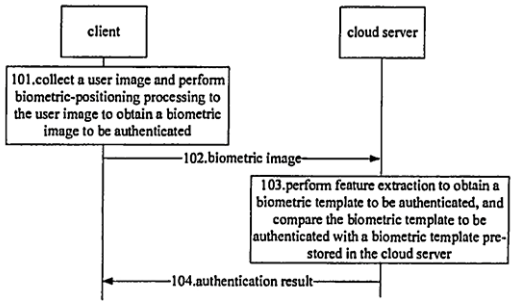

Fig. 1

Consulter le mémoire

---

(11) **17099**

(51) E02F 9/28 (06.01)

(21) 1201400434 - PCT/US13/030342

(22) 12.03.2013

(30) US n° 13/761287 du 07/02/2013;

US n° 61/613748 du 21/03/2013

(54) Screw-adjustable connector apparatus for telescoped wear and support members.

(72) CAMPOMANES Patrick.

(73) Hensley Industries, Inc. (US)

(74) Cabinet ÉKÉMÉ LYSAGHT SARL, B.P. 6370, YAOUNDE (CM).

(57) An earth engaging wear member is rearwardly telescoped onto a support member and is releasably retained thereon by specially designed connector apparatus extending through aligned connector openings in the wear and support members. The connector apparatus includes a spool member rearwardly bearing

against the wear member, a shim member forwardly spaced apart from the spool member and having a sloping rear surface, and a wedge screw member interposed between the spool and shim members. The wedge screw member has a non-tapered body threadingly engaging the spool member side portion, and a non-threaded, radially sloped surface area rampingly engaging the sloped shim surface area. Threaded advancement of the wedge screw member rearwardly moves the wear member relative to the support member to tighten an operationally-created loosened interfit there between.

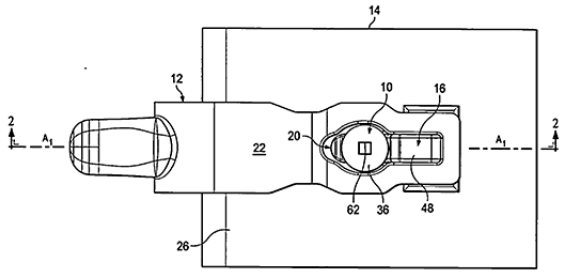

Fig. 1

Consulter le mémoire

(11) **17100**

(51) E02F 9/28 (06.01)

(21) 1201400435 - PCT/US13/030334

(22) 12.03.2013

(30) US n° 61/613719 du 21/03/2012;

US n° 13/761273 du 07/02/2013

(54) Adapter stabilization for bucket lip.

(72) CAMPOMANES Patrick.

(73) Hensley Industries, Inc. (US)

(74) Cabinet ÉKÉMÉ LYSAGHT SARL, B.P. 6370, YAOUNDE (CM).

(57) A ground engaging support structure such as an adapter is mounted on the front edge of an excavating bucket lip in a manner inhibiting side-to-side movement of the installed adapter, and shielding the front bucket lip edge from operational wear at the adapter installation location using opposing tapered block members secured to the front lip edge for movement toward a forwardly projecting stabilizing portion of the lip edge. As the adapter is telescoped onto the front lip edge over its stabilizing projection, correspondingly tapered portions of the adapter engage the block members and move them toward one another and toward the stabilizing projection. Rear leg portions of the adapter are then suitably secured to the bucket lip. The repositioned block members interposed between the adapter the front bucket lip edge then inhibit side-to-side shifting of the installed adapter while also shielding the lip edge from operational abrasion wear.

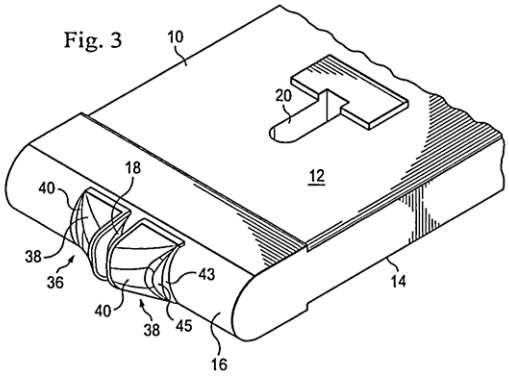

Consulter le mémoire

(11) **17101**

(51) E21B 17/01 (06.01)

(21) 1201400439 - PCT/FR13/050589

(22) 19.03.2013

(30) FR n° 1252542 du 21/03/2012

(54) Installation de liaisons fond-surface de type tour hybride multi-risers comprenant des conduites flexibles à flottabilité positive.

(72) PIONETTI François Régis.

(73) SAIPEM S.A. (FR)

(74) Cabinet CAZENAVE SARL, B.P. 500, YAOUNDE (CM).

(57) Installation de liaisons fond-surface de type tour hybride multi-risers comprenant des conduites flexibles à flottabilité positive. La présente invention concerne une installation de liaison fond- surface comprenant un dit support flottant comprenant un touret (1a) comprenant : - une pluralité de risers (10), dont les extrémités

supérieures sont solidaires d'une structure porteuse (3a), et - une pluralité de conduites flexibles (4a-4b, 4a1-4a2, 4b1-4b2) s'étendant depuis ledit touret jusqu'aux extrémités supérieures (10a) des risers, dont - au moins deux dites premières conduites flexibles à flottabilité positive positionnées à des hauteurs différentes, et - des modules de guidage (20) solidaires d'un tendon et aptes à coulisser le long de flotteurs (11) desdits risers.

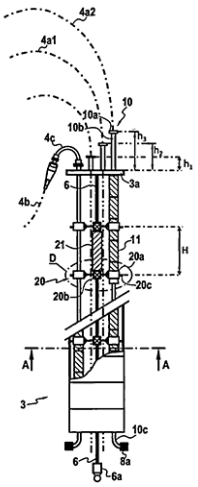

FIG.3

Consulter le mémoire

---

(11) **17102**

(51) B03C 1/247 (06.01)

(21) 1201400440 - PCT/BR13/000075

(22) 13.03.2013

(30) BR n° 102012008340-0 du 19/03/2012

(54) A process and system for dry recovery of iron-ore fines and superfines and a magnetic separation unit.

(72) YAMAMOTO, Mauro Fumyo.

(73) New Steel Solucöes Sustentaveis S.A. (BR)

(74) Cabinet Spoor & Fisher Inc. Ngwafor & Partners, Blvd. du 20 Mai, Immeuble Centre Commercial de l'Hôtel Hilton, 2è Etage, Porte 208A, B.P. 8211, YAOUNDE (CM).

(57) The present invention refers to a system and method for the totally dry treatment of iron-ore wastes from previous mining operations, suitable for both the processing of ore wastes deposited in barrages and wastes stored in piles. The present invention solves the problems of magnetic separation processes that employ the wet and waste- dewatering way, eliminating the risks which throwing solid wastes into retention barrages bring by a system and method wherein the moisture degree of the ore is reduced by means of a mechanical stir dryer (using natural gas to prevent contamination), which is then sorted into various fractions and finally separated magnetically, with the important difference of being an entirely dry process.

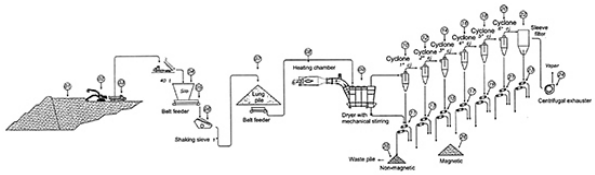

Consulter le mémoire

---

(11) **17103**

(51) G06F 3/12 (06.01)

(21) 1201400442 - PCT/KE13/000030

(22) 17.01.2013

(30) KE n° KE/P/2012/01529 du 23/03/2012

(54) Printing from a cellular phone.

(72) Mwangi, Mary.

(73) Mwangi, Mary (KE)

(74) Cabinet Spoor & Fisher Inc. Ngwafor & Partners, Blvd. du 20 Mai, Immeuble Centre Commercial de l'Hôtel Hilton, 2è Etage, Porte 208A, B.P. 8211, YAOUNDE (CM).

(57) A mobile printing system for printing a document from received electronic print data is provided, the system comprising a mobile cellular device in communication with a cellular network and in communication with a printer and including a network module and a removable storage media, the network module identifying the mobile cellular device to the cellular network as an electronic print data storage device for receipt of electronic print data; the electronic print data being stored on the storage media, said electronic print data being converted to an electronic print document by the mobile cellular device for transmission and printing by the printer.

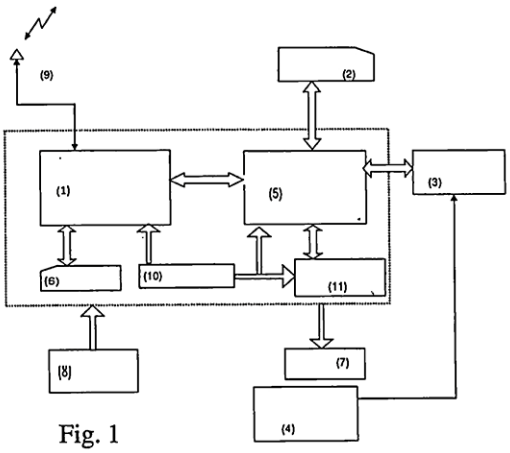

Fig. 1

Consulter le mémoire

---

(11) **17104**

(51) B60C 7/00 (06.01)

(21) 1201400517 - PCT/IB12/052599

(22) 24.05.2012

(54) An airless tyre for vehicles.

(72) LABUSCHAGNE Pieter Johannes.

(73) Prospect SA Investments 121 Limited (ZA)

(74) Cabinet ÉKÉMÉ LYSAGHT SARL, B.P. 6370, YAOUNDE (CM).

(57) A non-inflatable vehicle tyre comprising a rubber carcass moulded to fit and be secured to a wheel rim with a series of equally spaced passages extending transversely through the carcass to provide resilient supporting ribs between the passages and having a road engaging tread moulded to the carcass over a band of flexible steel cord reinforcing in which the band comprises a plurality of superimposed plies of coated hard steel cord and in which minor passages are provided through the ribs.

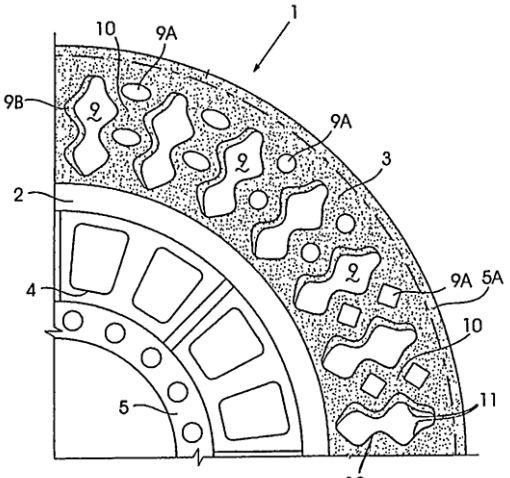

FIGURE 1

Consulter le mémoire

---

(11) **17105**

(51) E04B 2/18 (06.01)

(21) 1201400448 - PCT/IB13/052537

(22) 29.03.2013

(30) BE n° BE2012/0216 du 30/03/2012

(54) Building block, as well as an insert piece to be applied In such a building block.

(72) VANDENBEMPT, Patrick.

(73) Vandenbempt Patent CV (BE)

(74) Cabinet Spoor & Fisher Inc. Ngwafor & Partners, Blvd. du 20 Mai, Immeuble Centre Commercial de l'Hôtel Hilton, 2è Etage, Porte 208A, B.P. 8211, YAOUNDE (CM).

(57) Building block (2) formed of a body (19) in which are inserted one or several insert pieces (1), whereby a first and a complementary second coupling part (28, 29) are mainly formed of the one or several synthetic insert pieces (1) so as to be able to couple such building blocks (2) to one another, and whereby the first coupling part (28) and the second coupling part (29) are complementary in such a way that, after the adjacent building blocks (2) have been coupled, the coupled building blocks (2) concerned are coupled to one another in an immobile manner by making the coupling means (27) concerned work in conjunction with one another.

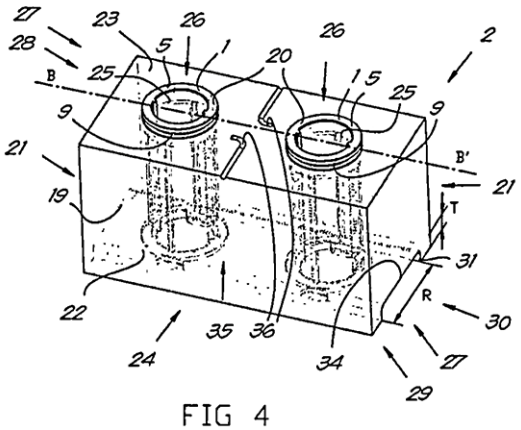

FIG 4

Consulter le mémoire

---

(11) **17106**

(51) F16L 1/18 (06.01)

(21) 1201400449 - PCT/IB13/052363

(22) 25.03.2013

(30) NO n° 20120392 du 29/03/2012;

NO n° 20120938 du 22/08/2012

(54) A support device for an elongate article.

(72) SCHWARTZ, Johan, Peter;

HOYER, Kjetil.

(73) Kongsberg Oil & Gas Technologies AS (NO)

(74) Cabinet Spoor & Fisher Inc. Ngwafor & Partners, Blvd. du 20 Mai, Immeuble Centre Commercial de l'Hôtel Hilton, 2è Etage, Porte 208A, B.P. 8211, YAOUNDE (CM).

(57) The invention concerns a capstan reel (10) and a method for transporting an elongated article (6, 6a, 6b, 39, 42, 43, 45a, 47) between a floating vessel (2) and a body of water situated below the vessel, and a vessel applying such a capstan reel. The capstan reel comprises a rotatable cylindrical body (100) for spooling the elongated article around the body's axial axis (11), said body comprising a cylindrical contacting surface (35) for indirectly supporting at least a portion of the elongated article. Furthermore, the capstan reel comprises an endless chain (18) spooled at least partly around the cylindrical body in a helical direction relative to the axial axis of the body, acting as an intermediate layer between the cylindrical contacting surface and the intended elongated article, and a chain transfer guide (17) extending across the axial length of the cylindrical body for guiding the endless chain between a chain exit region (T) in a first axial end region (7a) of the cylindrical body and a chain entry region (E) in a second axial end region (7b), the second axial end region being situated at the opposite axial end of the cylindrical body.

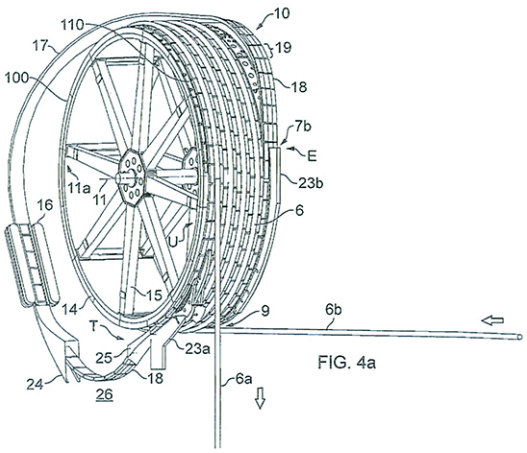

FIG. 4a

Consulter le mémoire

(11) **17107**

(51) H04H 20/08 (06.01)

(21) 1201400450 - PCT/FR13/050637

(22) 25.03.2013

(30) FR n° 1252783 du 28/03/2012

(54) Alternative hybrid broadcast.

(72) MASSE, Denis;

ROY, Jean-Roger.

(73) TDF, 106 avenue Marx Dormoy, F-92120, MONTROUGE (FR)

(74) Cabinet Spoor & Fisher Inc. Ngwafor & Partners, Blvd. du 20 Mai, Immeuble Centre Commercial de l'Hôtel Hilton, 2è Etage, Porte 208A, B.P. 8211, YAOUNDE (CM).

(57) The invention concerns a method for broadcasting services to fixed and mobile receivers comprising, in a broadcast network suitable for broadcast to mobile receivers, the steps of: - defining a main broadcasting component, the main broadcasting component being dedicated to broadcasting to mobile receivers; - defining a complementary broadcasting component, the complementary broadcasting component being dedicated to broadcasting to fixed receivers; - combining the main and complementary broadcasting components in a single signal to be broadcast in the broadcast network.L'invention concerne un procédé de diffusion de services à destination de récepteurs fixes et mobiles comportant, dans un réseau de diffusion adapté à une diffusion vers des récepteurs mobiles, les étapes de : -définir une composante de diffusion principale, la composante de diffusion principale étant dédiée à

une diffusion à destination de récepteurs mobiles ; -définir une composante de diffusion complémentaire, la composante de diffusion complémentaire étant dédiée à une diffusion à destination de récepteurs fixes ; -combiner les composantes de diffusion principale et complémentaire dans un unique signal pour une diffusion dans le réseau de diffusion.

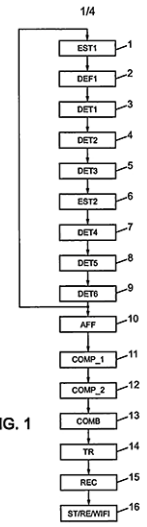

FIG. 1

Consulter le mémoire

---

(11) **17108**

(51) D08M 13/00 (06.01)

(21) 1201400454

(22) 15.07.2013

(54) Machine à tanner le tissu.

(72) Monsieur Lassana TOGOLA.

(73) Monsieur Lassana TOGOLA, Rue 433 Porte 560 Kalaban Coura Extension Sud Bamako, BAMAKO (ML).

(57) La machine est destinée au tannage mécanique de tissu. L'invention concerne une machine qui sert au tannage ou tapage mécanique des tissus dans le but de réduire les efforts physiques et optimiser la qualité du tannage de tissu qui se fait depuis toujours par la force des bras. Il s'agit d'étaler le tissu sur la surface lisse d'un bloc de bois qu'on appelle le gros-bois (21) sur lequel il subit le tapage régulier effectué par la paire de petit-bois (22). Elle est constituée d'un cadre (9) composé d'un châssis principal (9.1) muni de deux boîtiers principaux (9.3). C'est sur ce cadre que se montent une poulie supérieure (19) et une poulie inférieure (20) actionnées par un moteur électrique (30) par l'intermédiaire de la petite courroie (29) et de la grande courroie (28). Le cadre porte aussi le cadre de glissière (10) qui porte à son tour deux glissières (14) parallèles dans lesquelles coulissent les bras de tannages (17) munis 25 d'amortisseur (27) et de petit-bois (22). Fonctionnant grâce à un moteur électrique (30), l'ensemble de ce dispositif repose sur une table (1) et est couvert par un capot (26) composé de quatre pièces. La machine selon l'invention est particulièrement destinée au tannage ou tapage de tissu, surtout du basin qui est un tissu très prisé en Afrique et plus précisément 30 en Afrique de l'Ouest.

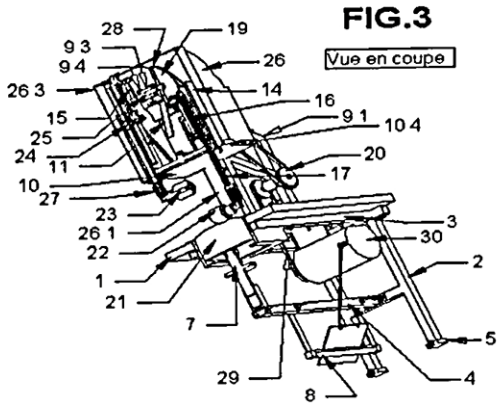

Consulter le mémoire

---

(11) **17109**

(51) H01R 1/00 (06.01)

(21) 1201400462

(22) 18.09.2014

(54) Prise temporisée.

(72) M. IDRISSA Koné.

(73) M. IDRISSA Koné, 01 B.P. 6923, ABIDJAN 01-M44 (CI).

(57) L'invention concerne une prise qui permet d'alimenter avec un retard ajustable. Elle comprend : l'alimentation, le temporisateur (1) qui excite le relais (2) après un temps réglable, le relais (2) de 5 sortie qui commande la fermeture du circuit des appareils à protéger ; la prise secteur (3) où sont branchés les appareils à protéger. En cas de présence du courant, la carte du temporisateur (1) est alimentée et les contacts (4) du relais (2) sont fermés : la prise (3) est sous tension électrique. Quand il y a coupure du courant, la carte du temporisateur (1) n'est plus alimentée et le relais (2) 10 ouvre ses contacts

(4). La boucle de la tension du secteur est ouverte alors et les appareils sont isolés.

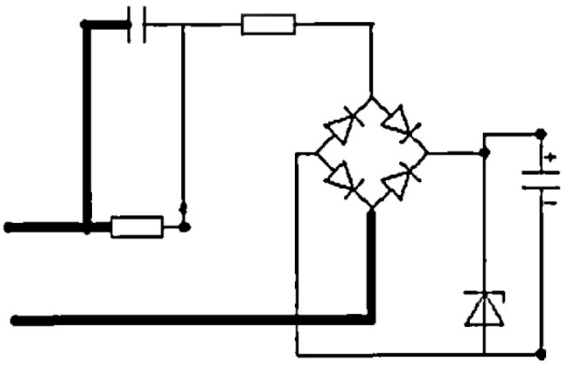

Consulter le mémoire

---

(11) **17110**

(51) B01F 3/00 (06.01)

(21) 1201400465 - PCT/AU13/000250

(22) 14.03.2013

(30) AU n° 2012202150 du 13/04/2012

(54) A flow distributor.

(72) DOIG, Scott Gordon.

(73) PROCESS DEVELOPMENT CENTRE PTY LTD (AU)

(74) SCP AKKUM, AKKUM & Associates, Quartier Mballa II, Dragages, B.P. 4966, YAOUNDE (CM).

(57) A flow distribution system for a multi-phase fluid stream is described. The system comprises : an inlet for receiving a multi-phase fluid stream from an inlet pipe; a plurality of outlets each for delivering a portion of the multi-phase fluid stream to a respective outlet pipe; and, a hollow housing forming an inner chamber in fluid communication with the inlet and the plurality of outlets, the housing having a central longitudinal axis. The inner chamber has a first chamber portion adjacent to the inlet and a second chamber portion adjacent to the plurality of outlets, and the first chamber portion has a cross-sectional area that is less than the cross-sectional area of the second chamber portion. A non-planar flow diverter is positioned within the chamber so as to define a flow channel of varying cross-sectional area as measured in a plane orthogonal to the central longitudinal axis of the housing, for varying the flow rate of the multi-phase fluid stream as it passes through the flow channel whereby turbulent mixing of the multi-phase fluid stream in the inner chamber is encouraged.

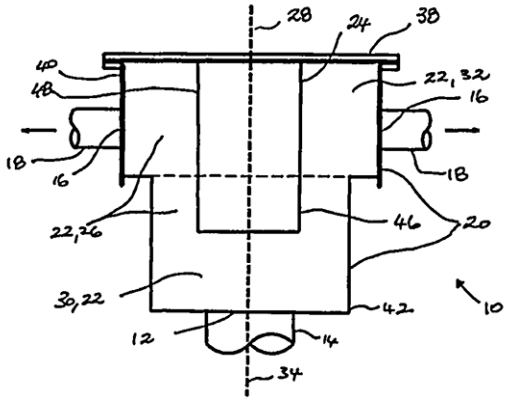

Fig. 1

Consulter le mémoire

---

(11) **17111**

(51) B23K 37/053 (06.01)

(21) 1201400467 - PCT/DE13/000179

(22) 26.03.2013

(30) DE n° 102012007563.4 du 10/04/2012

(54) Device for connecting the ends of pipes made of steel by means of an orbital welding process.

(72) KOCKS Hans-Jürgen;

WINKELS Jörn;

KEITEL Steffen;

NEUBERT Jan;

RUDE Sebastian.

(73) Salzgitter Mannesmann Line Pipe GmbH (DE)

(74) Cabinet ÉKÉMÉ LYSAGHT SARL, B.P. 6370, YAOUNDE (CM).

(57) The invention relates to a device for connecting the ends of pipes, which are already aligned and tack-welded and which are made of steel in particular, by means of an orbital welding process using a welding joint which is formed by the pipe ends and using tools which can be moved about the welding joint in an orbital manner for welding and checking the welding seam. The device consists of guide base plates which can be placed on both sides at each pipe end in the region of the welding point and which can be rigidly clamped to said pipe ends. The guide base plates centrally have a circular recess with a radial opening for the feed-through of the

pipes to be welded and for centrally receiving said pipes in the recess. The guide base plates comprise clamping elements for clamping the guide base plates to the pipe ends, said clamping elements being rigidly connected to each guide base plate face facing away from the welding joint, and a frame for receiving the welding and checking tools, said frame being rotatably mounted between the guide base plates on the inner faces facing the welding joint and being centrally pivotal about the pipe ends by at least 360°.

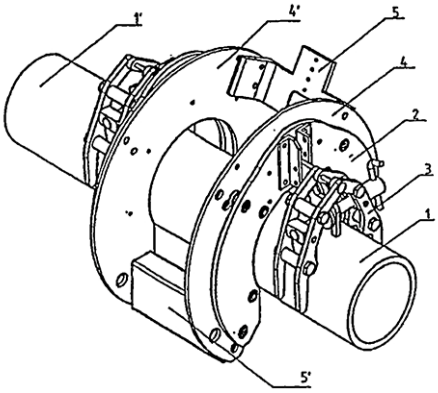

Fig. 1

Consulter le mémoire

---

(11) **17112**

(51) B07B 1/46 (06.01)

(21) 1201400519 - PCT/US13/030960

(22) 13.03.2013

(30) US n° 61/652,039 du 25/05/2012

US n° 61/714,882 du 17/10/2012

(54) Injection molded screening apparatuses and methods.

(72) Wojciechowski, Keith F.

(73) Wojciechowski, Keith F. (US)

(74) Cabinet Spoor & Fisher Inc. Ngwafor & Partners, Blvd. du 20 Mai, Immeuble Centre Commercial de l'Hôtel Hilton, 2è Etage, Porte 208A, B.P. 8211, YAOUNDE (CM).

(57) Screening members, screening assemblies (10), methods for fabricating screening members and assemblies and methods for screening materials are provided for vibratory screening machines that incorporate the use of injection molded materials. Use of injection molded screen elements (16) provide, inter alia, for: varying screening surface configurations; fast and relatively simple screen assembly fabrication; and a combination of outstanding screen assembly mechanical and electrical properties, including toughness, wear and chemical resistance. Embodiments of the present invention use a thermoplastic injection molded material.

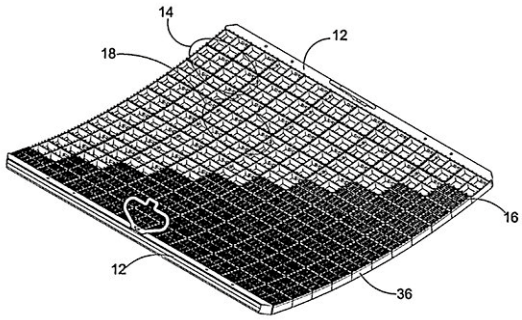

FIG. 8

Consulter le mémoire

---

(11) **17113**

(51) H04L 29/08 (06.01)

(21) 1201400474 - PCT/CN13/073757

(22) 03.04.2013

(30) CN n° 201210109917.6 du 16/04/2012

CN n° 201210138491.7 du 07/05/2012

(54) Instruction triggering method and device, user information acquisition method and system, terminal, and server.

(72) ZHANG, Xiaolong;

WU, Guanchu;

XIE,Yongbo;

HUANG, Lei.

(73) Tencent Technology (Shenzhen) Company Limited (CN)

(74) Cabinet Spoor & Fisher Inc. Ngwafor & Partners, Blvd. du 20 Mai, Immeuble Centre Commercial de l'Hôtel Hilton, 2è Etage, Porte 208A, B.P. 8211, YAOUNDE (CM).

(57) Disclosed are an instruction triggering method and device, a user information acquisition method and system, a terminal, and a server. An instruction triggering method includes: detecting a shaking operation of a mobile terminal; and according to the acquired shaking operation, triggering a preset input instruction. A user information acquisition method includes: a mobile terminal sending a user information acquisition request to a server when a shaking operation is detected; and the mobile terminal receiving the

user information of a matching user which is returned by the server according to the user information acquisition request. Another user information acquisition method includes: after a server receives a user information acquisition request from a mobile terminal triggered by a shaking operation, acquiring a user matching with the user information acquisition request, and sending the user information of the matching user to the mobile terminal. The present invention improves the operational convenience, and enhances random friend-making experience in a wide application range.

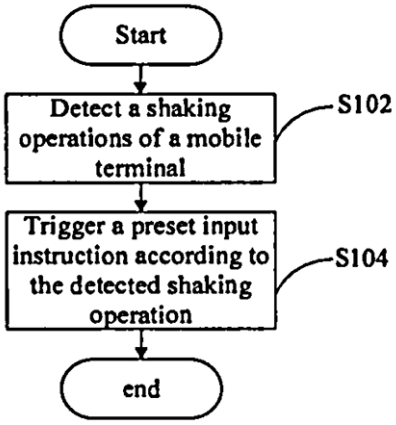

Fig. 1

Consulter le mémoire

---

(11) **17114**

(51) H04L 29/08 (06.01)

(21) 1201400477 - PCT/CN13/074289

(22) 17.04.2013

(30) CN n° 201210112130.5 du 17/04/2012

(54) Information sharing method, apparatus, and computer device.

(72) LIANG, Zhu;

FENG, Xin.

(73) TENCENT TECHNOLOGY (SHENZHEN) COMPANY LIMITED (CN)

(74) SCP NICO HALLE & Co. LAW FIRM, B.P. 4876, DOUALA (CM).

(57) Described is an information sharing method and apparatus, which are directed to information published by a user in a social network. For information published by a user in a social network, when a sharing instruction of the user is received, a selection box comprising one or more sharing targets is displayed for the user, each sharing target has its corresponding social network, and the social network corresponding to the sharing target includes a social network which published the information ; when a submission instruction of the user is received, the information is sent to a sharing target selected by the user from the selection box. By using the present method, the spread of information can be accelerated, and the implementation is simple and convenient.

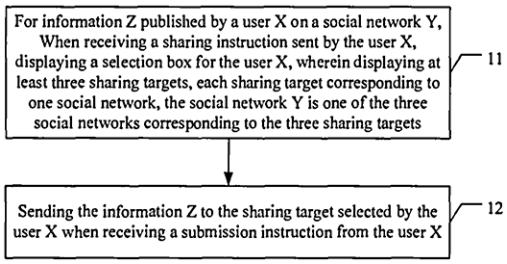

Fig. 1

Consulter le mémoire

---

(11) **17115**

(51) B65D 19/32 (06.01)

(21) 1201400478 - PCT/EP12/001831

(22) 27.04.2012

(54) Transport pallet of plastics material having stoppers acting on both sides to inhibit sliding

(72) BRUNSMANN, Jochen;

BARTH, Christian.

(73) Schoeller Allibert GMBH (DE)

(74) Cabinet Spoor & Fisher Inc. Ngwafor & Partners, Blvd. du 20 Mai, Immeuble Centre Commercial de l'Hôtel Hilton, 2è Etage, Porte 208A, B.P. 8211, YAOUNDE (CM).

(57) A transport pallet made from plastic, comprising an upper deck including a top side with a loading surface for product and goods and bottom side, wherein engagement openings for lifting devices like forks of forklifts are provided below the upper deck which engagement openings are defined by support bases and/or a pallet base, wherein receivers are configured in the upper deck in which receivers plugs made from a material with a higher friction coefficient than the pallet material are provided, wherein the plugs extend from the top side the bottom side of the upper deck and protrude in outward direction with their face ends from the upper deck at the top side and at the bottom side.

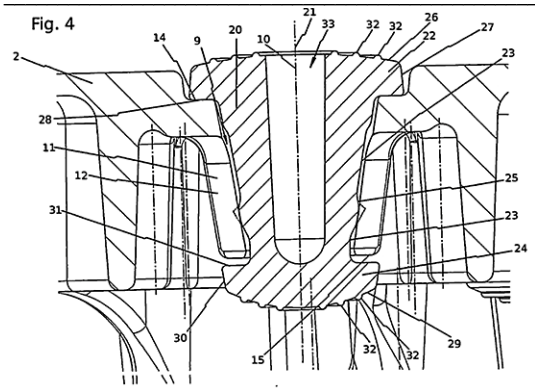

Consulter le mémoire

B
REPERTOIRE SUIVANT LA C.I.B.

(11)	(51)
17069	A01N 25/32
17083	A01N 43/56
17074	A23L 1/22
17078	A61K 31/337
17075	A61K 31/422
17073	A61K 36/85
17066	A61K 36/886
17084	A61K 9/00
17082	B01D 53/62
17081	B01D 53/70
17110	B01F 3/00 (06.01)
17102	B03C 1/247 (06.01)
17071	B06F 5/02 (06.01)
17112	B07B 1/46 (06.01)
17111	B23K 37/053 (06.01)
17104	B60C 7/00 (06.01)
17115	B65D 19/32 (06.01)
17088	C04K 28/02
17077	C06B 25/36
17079	C07D 213/75
17076	C07D 231/14
17072	C07D 235/02
17087	C07D 311/58
17086	C07D 473/34
17070	C07K 16/28
17085	C07K 16/40
17068	C12N 15/53
17080	D01F 6/92
17108	D08M 13/00 (06.01)
17100	E02F 9/28 (06.01)
17099	E02F 9/28 (06.01)
17105	E04B 2/18 (06.01)
17101	E21B 17/01 (06.01)
17106	F16L 1/18 (06.01)
17092	G01M 11/08 (06.01)

(11)	(51)
17094	G01V 1/38 (06.01)
17089	G06F 17/30 (06.01)
17093	G06F 19/00 (06.01)
17103	G06F 3/12 (06.01)
17095	G06F 9/445 (06.01)
17096	G06Q 30/02 (06.01)
17109	H01R 1/00 (06.01)
17107	H04H 20/08 (06.01)
17067	H04L 12/00 (06.01)
17090	H04L 12/58 (06.01)
17097	H04L 12/58 (06.01)
17091	H04L 29/06 (06.01)
17113	H04L 29/08 (06.01)
17114	H04L 29/08 (06.01)
17098	H04L 9/32 (06.01)

C
REPERTOIRE DES NOMS

Aeromobil, s.r.o.

(11) 17071 (51) B06F 5/02 (06.01)

Ajinomoto Co., Inc.

(11) 17074 (51) A23L 1/22

AVENTIS PHARMA S.A.

(11) 17078 (51) A61K 31/337

Board of Regents of the University of Texas System

(11) 17094 (51) G01V 1/38 (06.01)

Boehringer Ingelheim International GmbH

(11) 17072 (51) C07K 16/28

(11) 17079 (51) C07D 213/75

BOEHRINGER INGELHEIM INTERNATIONAL GMBH and VITAE PHARMACEUTICALS, INC.

(11) 17087 (51) C07D 235/02

COMMERZIALBANK MATTERSBURG IM BURGENLAND AKTIENGESELLSCHAFT

(11) 17081 (51) B01D 53/70

(11) 17082 (51) B01D 53/62

Dow AgroSciences LLC

(11) 17069 (51) A01N 25/32

Gilead Biologics, Inc.

(11) 17085 (51) C07K 16/40

GILEAD SCIENCES, INC.

(11) 17070 (51) C07D 473/34

Halliburton Energy Services, Inc.

(11) 17088 (51) C04K 28/02

Hensley Industries, Inc.

(11) 17099 (51) E02F 9/28 (06.01)

(11) 17100 (51) E02F 9/28 (06.01)

IDRISSA Koné (M.)

(11) 17109 (51) H01R 1/00 (06.01)

KANEKA CORPORATION

(11) 17080 (51) D01F 6/92

Kongsberg Oil & Gas Technologies AS

(11) 17106 (51) F16L 1/18 (06.01)

Lassana TOGOLA (Monsieur)

(11) 17108 (51) D08M 13/00 (06.01)

Lupin Limited

(11) 17086 (51) C07D 311/58

Maxam Dantex South Africa (Propriety) Limited

(11) 17077 (51) C06B 25/36

Merial Limited

(11) 17075 (51) A61K 31/422

(11) 17083 (51) A01N 43/56

Mwangi, Mary

(11) 17103 (51) G06F 3/12 (06.01)

New Steel Solucöes Sustentaveis S.A.

(11) 17102 (51) B03C 1/247 (06.01)

NORTH TEXAS MEDICAL ASSOCIATES

(11) 17066 (51) A61K 36/886

NSANGOU MOUHAMMADOU BACHIROU (Monsieur)

(11) 17073 (51) A61K 36/85

ORANGE

(11) 17067 (51) H04L 12/00 (06.01)

PROCESS DEVELOPMENT CENTRE PTY LTD

(11) 17110 (51) B01F 3/00 (06.01)

Prospect SA Investments 121 Limited

(11) 17104 (51) B60C 7/00 (06.01)

Ranbaxy Laboratories Limited

(11) 17084 (51) A61K 9/00

SAIPEM S.A.

(11) 17101 (51) E21B 17/01 (06.01)

Salzgitter Mannesmann Line Pipe GmbH

(11) 17111 (51) B23K 37/053 (06.01)

Schoeller Allibert GMBH

(11) 17115 (51) B65D 19/32 (06.01)

SYNGENTA PARTICIPATIONS AG

(11) 17076 (51) C07D 231/14

TDF

(11) 17107 (51) H04H 20/08 (06.01)

TECHNIP FRANCE

(11) 17092 (51) G01M 11/08 (06.01)

Temasek Life Sciences Laboratory Limited

(11) 17068 (51) C12N 15/53

TENCENT TECHNOLOGY (SHENZHEN) COMPANY LIMITED			
(11)	17093	(51)	G06F 19/00 (06.01)
(11)	17098	(51)	H04L 9/32 (06.01)
(11)	17114	(51)	H04L 29/08 (06.01)
Tencent Technology (Shenzhen) Company Limited			
(11)	17089	(51)	G06F 17/30 (06.01)
(11)	17090	(51)	H04L 12/58 (06.01)
(11)	17091	(51)	H04L 29/06 (06.01)
(11)	17095	(51)	G06F 9/445 (06.01)
(11)	17096	(51)	G06Q 30/02 (06.01)
(11)	17097	(51)	H04L 12/58 (06.01)
(11)	17113	(51)	H04L 29/08 (06.01)
Vandenbempt Patent CV			
(11)	17105	(51)	E04B 2/18 (06.01)
Wojciechowski, Keith F.			
(11)	17112	(51)	B07B 1/46 (06.01)